TELEDYNE
ADVANCED POLLUTION INSTRUMENTATION
Everywhereyoulook™

OPERATION MANUAL

MODEL T101
UV FLUORESCENCE H_2S ANALYZER

Also supports operation of:

Model T102 Analyzer

(when used in conjunction with T102 Addendum, PN 07267)

© TELEDYNE ADVANCED POLLUTION INSTRUMENTATION
9480 CARROLL PARK DRIVE
SAN DIEGO, CA 92121-5201
USA

Toll-free Phone: 800-324-5190
Phone: 858-657-9800
Fax: 858-657-9816
Email: api-sales@teledyne.com
Website: http://www.teledyne-api.com/

Copyright 2011 - 2012
Teledyne Advanced Pollution Instrumentation

07266B DCN6845
08 June 2012

ABOUT TELEDYNE ADVANCED POLLUTION INSTRUMENTATION (TAPI)

Teledyne Advanced Pollution Instrumentation (TAPI), a business unit of Teledyne Instruments, Inc., is a worldwide market leader in the design and manufacture of precision analytical instrumentation used for air quality monitoring, continuous emissions monitoring, and specialty process monitoring applications. Founded in San Diego, California, in 1988, TAPI introduced a complete line of Air Quality Monitoring (AQM) instrumentation, which comply with the United States Environmental Protection Administration (EPA) and international requirements for the measurement of criteria pollutants, including CO, SO_2, NOx and Ozone.

Since 1988 TAPI has combined state-of-the-art technology, proven measuring principles, stringent quality assurance systems and world class after-sales support to deliver the best products and customer satisfaction in the business.

For further information on our company, our complete range of products, and the applications that they serve, please visit www.teledyne-api.com or contact sales@teledyne-api.com.

NOTICE OF COPYRIGHT

© 2011-2012 Teledyne Advanced Pollution Instrumentation. All rights reserved.

TRADEMARKS

All trademarks, registered trademarks, brand names or product names appearing in this document are the property of their respective owners and are used herein for identification purposes only.

This page intentionally left blank.

SAFETY MESSAGES

Important safety messages are provided throughout this manual for the purpose of avoiding personal injury or instrument damage. Please read these messages carefully. Each safety message is associated with a safety alert symbol, and are placed throughout this manual; the safety symbols are also located inside the instrument. It is imperative that you pay close attention to these messages, the descriptions of which are as follows:

WARNING: Electrical Shock Hazard

HAZARD: Strong oxidizer

GENERAL WARNING/CAUTION: Read the accompanying message for specific information.

CAUTION: Hot Surface Warning

Do Not Touch: Touching some parts of the instrument without protection or proper tools could result in damage to the part(s) and/or the instrument.

Technician Symbol: All operations marked with this symbol are to be performed by qualified maintenance personnel only.

Electrical Ground: This symbol inside the instrument marks the central safety grounding point for the instrument.

CAUTION

This instrument should only be used for the purpose and in the manner described in this manual. If you use this instrument in a manner other than that for which it was intended, unpredictable behavior could ensue with possible hazardous consequences.

NEVER use any gas analyzer to sample combustible gas(es)!

Note

For Technical Assistance regarding the use and maintenance of this instrument or any other Teledyne API product, contact Teledyne API's Technical Support Department:

Telephone: 800-324-5190

Email: sda_techsupport@teledyne.com

or access any of the service options on our website at http://www.teledyne-api.com/

CONSIGNES DE SÉCURITÉ

Des consignes de sécurité importantes sont fournies tout au long du présent manuel dans le but d'éviter des blessures corporelles ou d'endommager les instruments. Veuillez lire attentivement ces consignes. Chaque consigne de sécurité est représentée par un pictogramme d'alerte de sécurité; ces pictogrammes se retrouvent dans ce manuel et à l'intérieur des instruments. Les symboles correspondent aux consignes suivantes :

	AVERTISSEMENT : Risque de choc électrique
	DANGER : Oxydant puissant
	AVERTISSEMENT GÉNÉRAL / MISE EN GARDE : Lire la consigne complémentaire pour des renseignements spécifiques
	MISE EN GARDE : Surface chaude
	Ne pas toucher : Toucher à certaines parties de l'instrument sans protection ou sans les outils appropriés pourrait entraîner des dommages aux pièces ou à l'instrument.
	Pictogramme « technicien » : Toutes les opérations portant ce symbole doivent être effectuées uniquement par du personnel de maintenance qualifié.
	Mise à la terre : Ce symbole à l'intérieur de l'instrument détermine le point central de la mise à la terre sécuritaire de l'instrument.

MISE EN GARDE

Cet instrument doit être utilisé aux fins décrites et de la manière décrite dans ce manuel. Si vous utilisez cet instrument d'une autre manière que celle pour laquelle il a été prévu, l'instrument pourrait se comporter de façon imprévisible et entraîner des conséquences dangereuses.

NE JAMAIS utiliser un analyseur de gaz pour échantillonner des gaz combustibles!

WARRANTY

WARRANTY POLICY (02024 F)

Teledyne Advanced Pollution Instrumentation (TAPI), a business unit of Teledyne Instruments, Inc., provides that:

Prior to shipment, TAPI equipment is thoroughly inspected and tested. Should equipment failure occur, TAPI assures its customers that prompt service and support will be available.

COVERAGE

After the warranty period and throughout the equipment lifetime, TAPI stands ready to provide on-site or in-plant service at reasonable rates similar to those of other manufacturers in the industry. All maintenance and the first level of field troubleshooting are to be performed by the customer.

NON-TAPI MANUFACTURED EQUIPMENT

Equipment provided but not manufactured by TAPI is warranted and will be repaired to the extent and according to the current terms and conditions of the respective equipment manufacturer's warranty.

Product Return

All units or components returned to Teledyne API should be properly packed for handling and returned freight prepaid to the nearest designated Service Center. After the repair, the equipment will be returned, freight prepaid.

The complete Terms and Conditions of Sale can be reviewed at http://www.teledyne-api.com/terms_and_conditions.asp

CAUTION – Avoid Warranty Invalidation

Failure to comply with proper anti-Electro-Static Discharge (ESD) handling and packing instructions and Return Merchandise Authorization (RMA) procedures when returning parts for repair or calibration may void your warranty. For anti-ESD handling and packing instructions please refer to "Packing Components for Return to Teledyne API" in the *Primer on Electro-Static Discharge* section of this manual, and for RMA procedures please refer to our Website at http://www.teledyne-api.com under Customer Support > Return Authorization.

This page intentionally left blank.

ABOUT THIS MANUAL

This T101 operation manual, PN 07266, is comprised of multiple documents in PDF format, as listed below.

Part No.	Rev	Name/Description
07266	B	Model T101 Operation Manual (this manual)
05492	D	Menu Trees and Software Documentation (inserted as Appendix A of this manual)
07347	1/19/2011	Spare Parts List (in Appendix B of this manual)
05494	D	Repair Questionnaire (inserted as Appendix C of this manual)

Documents included in Appendix D:

03956	A	PCA, 03955, Relay Driver
04354	D	PCA, 04003, Pressure Flow Sensor Board
04181	H	PCA, 04180, PMT Preamp
04420	B	PCA, 04120, UV Detector Preamp
04693	E	PCA, 04692, UV Lamp Driver
04932	C	PCA, Thermo-Electric Cooler Board
04468	B	PCA, 04467, Analog Output Isolator
06731	B	Schem, Auxiliary IO
05803	B	Schem, Gen5 Motherboard
06698	D	Schem, LCD Tchscrn Interface
06882	B	Schem, LVDS transmitter

NOTE

Please read this manual in its entirety before making any attempt to operate the instrument.

REVISION HISTORY

T101 Operation Manual 072660000

REV	DATE	DCN	DESCRIPTION
B	2012 June 08	6845	Administrative updates.
A	2011 February 14	5970	Initial Release

This page intentionally left blank.

TABLE OF CONTENTS

1. INTRODUCTION 19
1.1. Features 19
1.2. Options 20
2. SPECIFICATIONS AND APPROVALS 23
2.1. Specifications 23
2.2. Approvals and Certifications 24
2.2.1. Safety 24
2.2.2. EMC 24
2.2.3. Other Type Certifications 24
3. GETTING STARTED 25
3.1. Unpacking and Initial Setup 25
3.2. Instrument Layout 26
3.2.1. Front Panel 26
3.2.2. Rear Panel 30
3.2.3. Internal Chassis Layout 32
3.3. Electrical Connections 33
3.3.1. Analog Inputs (Option 64) Connections 33
3.3.2. Connecting the Analog Outputs 34
3.3.2.1. Current Loop Analog Outputs (Option 41) Setup 35
3.3.3. Connecting the Status Outputs 36
3.3.4. Connecting the Control Inputs 37
3.3.5. Connecting the Communications Ports 39
3.3.5.1. Connecting the Serial Ports 39
3.3.5.2. Connecting to a LAN or the Internet 39
3.3.5.3. Connecting to a Personal Computer (USB Option) 39
3.3.5.4. Connecting to a Multidrop Network (Option) 39
3.4. Pneumatic Connections 39
3.4.1.1. Connections with Internal Valve Options Installed 45
3.5. Startup, Functional Checks, and Initial Calibration 50
3.5.1. Startup 50
3.5.2. Warm-Up 50
3.5.3. Warning Messages 50
3.5.4. Functional Check 52
3.6. Initial Calibration 53
3.6.1. Basic Calibration Procedure 53
3.6.2. Interferences for H_2S Measurements 56
4. OPERATING INSTRUCTIONS 57
4.1. Overview of Operating Modes 57
4.2. Sample Mode 58
4.2.1. Test Functions 58
4.2.2. Warning Messages 61
4.3. Calibration Mode 62
4.3.1. Calibration Password Security 62
4.4. Setup Mode 64
4.4.1. Setup – CFG: Viewing the Analyzer's Configuration Information 65
4.4.2. Setup – ACAL: Auto Calibration 66

4.4.3. Setup – DAS: Data Acquisition 66
4.4.4. Setup – Range: Analog Output Reporting Range Configuration 66
4.4.4.1. Available Analog Output Signals 66
4.4.4.2. Physical Range versus Analog Output Reporting Ranges 67
4.4.4.3. Reporting Range Modes 68
4.4.4.4. Single Range Mode (SNGL) 69
4.4.4.5. Independent Range Mode (IND) 70
4.4.4.6. Auto Range Mode (AUTO) 71
4.4.4.7. Range Units 72
4.4.4.8. Dilution Ratio 73
4.4.5. Setup – Pass: Password Protection 74
4.4.6. SETUP – CLK: Setting the Internal Time-of-Day Clock 75
4.5. SETUP – VARS: Using the Internal Variables 77
4.5.1. Setting the Gas Measurement Mode 80
4.6. SETUP – DIAG: Using the Diagnostics Functions 81
4.6.1. Signal I/O 83
4.6.2. Analog Output Step Test 84
4.6.3. Analog I/O Configuration 85
4.6.3.1. Analog Output Signal Type and Range Span Selection 87
4.6.3.2. Analog Output Calibration Mode 88
4.6.3.3. Manual Analog Output Calibration and Voltage Adjustment 90
4.6.3.4. Analog Output Offset Adjustment 92
4.6.3.5. Current Loop Output Adjustment 92
4.6.3.6. AIN Calibration 95
4.6.3.7. Analog Inputs (XIN1…XIN8) Option Configuration 96
4.6.4. Optic Test 97
4.6.5. Electrical Test 98
4.6.6. Lamp Calibration 99
4.6.7. Pressure Calibration 100
4.6.8. Flow Calibration 101
4.6.9. Test Channel Output 102
4.7. SETUP – COMM: Setting Up the Analyser's Communication Ports 103
4.7.1. Instrument ID 103
4.7.2. COM Port Default Settings 105
4.7.3. RS-232 COM Port Cable Connections 105
4.7.4. RS-485 Configuration 107
4.7.5. DTE and DCE Communication 107
4.7.6. Ethernet Configuration 107
4.7.6.1. Configuring the Ethernet Interface Using DHCP 107
4.7.6.2. Manually Configuring the Ethernet with Static IP Addresses 109
4.7.6.3. Changing the Analyzer's HOSTNAME 112
4.7.7. USB Configuration 114
4.7.8. Multidrop RS-232 Set Up 116
4.7.9. MODBUS Set Up 119
4.7.10. COM Port Communication Modes 121
4.7.11. COM Port Baud Rate 123
4.7.12. COM Port Testing 124
4.8. Using the Data Acquisition System (DAS) 124
4.8.1. DAS Structure 125
4.8.1.1. DAS Channels 125
4.8.1.2. DAS Parameters 126
4.8.1.3. DAS Configuration Limits 127
4.8.1.4. DAS Triggering Events 127
4.8.2. Default DAS Channels 128
4.8.2.1. Viewing DAS Data and Settings 130
4.8.2.2. Editing DAS Data Channels 131
4.8.2.3. Trigger Events 133
4.8.2.4. Editing DAS Parameters 134
4.8.2.5. Sample Period and Report Period 135
4.8.2.6. Number of Records 137
4.8.2.7. RS-232 Report Function 139
4.8.2.8. Compact Report 139

4.8.2.9. Starting Date 139
4.8.2.10. Disabling/Enabling Data Channels 140
4.8.2.11. HOLDOFF Feature 141
4.8.3. Remote DAS Configuration 142
5. REMOTE OPERATION 143
5.1.1. Remote Operation Using the External Digital I/O 143
5.1.1.1. Status Outputs 143
5.1.1.2. Control Inputs 145
5.1.2. Remote Operation Using the External Serial I/O 146
5.1.2.1. Terminal Operating Modes 146
5.1.2.2. Help Commands in Terminal Mode 147
5.1.2.3. Command Syntax 148
5.1.2.4. Data Types 148
5.1.2.5. Status Reporting 149
5.1.2.6. General Message Format 150
5.1.2.7. Remote Access by Modem 150
5.1.2.8. COM Port Password Security 153
5.1.2.9. APICOM Remote Control Program 153
5.1.3. Additional Communications Documentation 154
5.1.4. Using the T101 with a Hessen Protocol Network 155
5.1.4.1. General Overview of Hessen Protocol 155
5.1.4.2. Hessen COMM Port Configuration 155
5.1.4.3. Activating Hessen Protocol 156
5.1.4.4. Selecting a Hessen Protocol Type 157
5.1.4.5. Setting The Hessen Protocol Response Mode 157
5.1.4.6. Hessen Protocol Gas ID 159
5.1.4.7. Setting Hessen Protocol Status Flags 160
6. CALIBRATION PROCEDURES 163
6.1. Calibration Preparations 163
6.1.1. Required Equipment, Supplies, and Expendables 163
6.1.2. Zero Air 164
6.1.3. Gas Standards 164
6.1.4. Permeation Tubes 164
6.1.5. Calibration Gas Traceability 165
6.1.6. Data Recording Devices 165
6.2. Manual Calibration 165
6.3. Manual Calibration Checks 169
6.4. Manual Calibration with Zero/Span Valves 170
6.5. Manual Calibration with IZS Option 173
6.6. Manual Calibration Checks with IZS or Zero/Span Valves 174
6.7. Manual Calibration in INDEPENDENT or AUTO Reporting Range Modes 177
6.7.1. Calibration With Remote Contact Closures 177
6.8. Manual Calibration in Multigas Measurement Mode 178
6.9. Automatic Calibration/Checks (AutoCal) 179
6.9.1. Autocal of Instruments in INDEPENDENT or AUTO Reporting Range Modes 183
6.9.2. Autocal of Instruments in Multigas Measurement Mode 184
6.10. Calibration Quality 185
7. EPA PROTOCOL CALIBRATION 187
7.1. Calibration Requirements 187
7.1.1. Calibration of Equipment 187
7.1.2. Data Recording Device 189
7.1.3. Recommended Standards for Establishing Traceability 189
7.1.4. EPA Calibration Using Permeation Tubes 189
7.1.5. Calibration Frequency 190
7.1.6. Record Keeping 190
7.1.7. Summary of Quality Assurance Checks 191
7.2. Level 1 Calibrations versus Level 2 Checks 191
7.3. ZERO and SPAN Checks 193
7.3.1. Zero/Span Check Procedures 193
7.4. Precisions Calibration Procedures and Checks 193
7.4.1. Precision Calibration 194
7.4.2. Precision Check 194

7.5. Dynamic Multipoint Span Calibration 195
7.6. Special Calibration Requirements for Independent Range or Auto Range 196
7.7. References 196
8. INSTRUMENT MAINTENANCE 197
8.1. Maintenance Schedule 197
8.2. Predictive Diagnostics 201
8.3. Maintenance Procedures 202
8.3.1. Changing the Sample Particulate Filter 202
8.3.2. Changing the IZS Permeation Tube 203
8.3.3. Maintaining the SO_2 Scrubber 203
8.3.3.1. Predicting When the SO_2 Scrubber Should Be Replaced. 203
8.3.3.2. Checking the Function of the SO_2 Scrubber 204
8.3.3.3. Changing the SO_2 Scrubber Material 204
8.3.4. Changing the External Zero Air Scrubber 205
8.3.5. Maintaining the $H_2S \rightarrow SO_2$ Converter 206
8.3.5.1. Predicting When the Converter Catalyst Should Be Replaced. 206
8.3.5.2. Checking the Efficiency of the $H_2S \rightarrow SO_2$ Converter 206
8.3.5.3. Changing the $H_2S \rightarrow SO_2$ Converter Catalyst Material 207
8.3.6. Checking for Light Leaks 209
8.3.7. Changing the Critical Flow Orifice 209
9. TROUBLESHOOTING & SERVICE 211
9.1. General Troubleshooting 211
9.1.1. Fault Diagnosis with Warning Messages 212
9.1.2. Fault Diagnosis with Test Functions 216
9.1.3. Using the Diagnostic Signal I/O Function 217
9.1.4. Status LEDs 218
9.1.4.1. Motherboard Status Indicator (Watchdog) 219
9.1.4.2. CPU Status Indicator 219
9.1.4.3. Relay Board Status LEDs 219
9.2. Gas Flow Problems 220
9.2.1. Zero or Low Sample Flow 221
9.2.2. High Flow 221
9.3. Calibration Problems 221
9.3.1. Negative Concentrations 221
9.3.2. No Response 222
9.3.3. Unstable Zero and Span 222
9.3.4. Inability to Span - No SPAN Button 222
9.3.5. Inability to Zero - No ZERO Button 223
9.3.6. Non-Linear Response 223
9.3.7. Discrepancy Between Analog Output and Display 224
9.4. Other Performance Problems 224
9.4.1. Excessive Noise 224
9.4.2. Slow Response 224
9.4.3. The Analyzer Doesn't Appear on the LAN or Internet 225
9.5. Subsystem Checkout 225
9.5.1. Detailed Pressure Leak Check 225
9.5.2. Performing a Sample Flow Check 226
9.5.3. AC Power Configuration 226
9.5.4. DC Power Supply 227
9.5.5. I^2C Bus 228
9.5.6. Touchscreen Interface 228
9.5.7. LCD Display Module 228
9.5.8. Relay Board 228
9.5.9. Motherboard 229
9.5.9.1. A/D functions 229
9.5.9.2. Analog Output Voltages 229
9.5.9.3. Status Outputs 230
9.5.9.4. Control Inputs 230
9.5.10. CPU 230
9.5.11. RS-232 Communication 231
9.5.11.1. General RS-232 Troubleshooting 231
9.5.11.2. Modem or Terminal Operation 231

9.5.12. PMT Sensor 232
9.5.13. PMT Preamplifier Board 232
9.5.14. PMT Temperature Control PCA 232
9.5.15. High Voltage Power Supply 233
9.5.16. Pneumatic Sensor Assembly 233
9.5.16.1. Sample Pressure 233
9.5.17. IZS Option 233
9.5.18. Box Temperature 234
9.5.19. PMT Temperature 234
9.6. Repair Procedures 234
9.6.1. Disk-on-Module Replacement 234
9.6.2. Adjusting the UV Lamp (Peaking the Lamp) 235
9.6.3. Replacing the UV Lamp 237
9.6.4. Factory Cal (PMT Sensor, Hardware Calibration) 238
9.7. Frequently Asked Questions (FAQs) 240
9.8. Technical Assistance 241
10. PRINCIPLES OF OPERATION 243
10.1. Measurement Principle 243
10.1.1. H_2S Conversion 243
10.1.2. SO_2 Ultraviolet Fluorescence 244
10.2. The UV Light Path 247
10.2.1. UV Source Lamp 247
10.2.2. The Reference Detector 248
10.2.3. The PMT 248
10.2.4. Optical Filters 249
10.2.4.1. UV Source Optical Filter 249
10.2.4.2. PMT Optical Filter 249
10.2.5. Optical Lenses 250
10.2.6. Measurement Interferences 251
10.2.6.1. Direct Interference 251
10.2.6.2. UV Absorption by Ozone 252
10.2.6.3. Dilution 252
10.2.6.4. Third Body Quenching 252
10.2.6.5. Light Pollution 252
10.3. Pneumatic Operation 253
10.3.1. Sample Gas Flow 254
10.3.2. Multigas Measurement & $H_2S \rightarrow SO_2$ Switching Valve. 255
10.3.3. Flow Rate Control 255
10.3.3.1. Critical Flow Orifice 255
10.3.4. Sample Particulate Filter 256
10.3.5. Hydrocarbon Scrubber (Kicker) 257
10.3.6. SO_2 Scrubber 257
10.3.7. Pneumatic Sensors 258
10.3.7.1. Sample Pressure Sensor 258
10.3.7.2. Sample Flow Sensor 258
10.4. Electronic Operation 259
10.4.1. CPU 261
10.4.1.1. Disk On Module (DOM) 261
10.4.1.2. Flash Chip 261
10.4.2. Sensor Module & Sample chamber 262
10.4.3. Sample Chamber Heating Circuit 262
10.4.4. Photo Multiplier Tube (PMT) 263
10.4.5. PMT Cooling System 264
10.4.5.1. Thermoelectric Cooler (TEC) 264
10.4.5.2. TEC Control Board 265
10.4.6. PMT Preamplifier 265
10.4.7. Pneumatic Sensor Board 267
10.4.8. Relay Board 267
10.4.8.1. Heater Control 267
10.4.8.2. Valve Control 267
10.4.9. Status LEDs & Watch Dog Circuitry 268
10.4.10. Motherboard 269

10.4.10.1. A to D Conversion 269
10.4.10.2. Sensor Inputs 269
10.4.10.3. Thermistor Interface 270
10.4.11. Analog Outputs 270
10.4.12. External Digital I/O 271
10.4.13. I^2C Data Bus 271
10.4.14. Power up Circuit 271
10.5. Power Supply/ Circuit Breaker 271
10.6. Front Panel/Display Interface 273
10.6.1. LVDS Transmitter Board 273
10.6.2. Front Panel Interface PCA 273
10.7. Software Operation 274
10.7.1. Adaptive Filter 274
10.7.2. Calibration - Slope and Offset 275
10.7.3. Temperature and Pressure Compensation (TPC) Feature 276
10.7.4. Internal Data Acquisition System (DAS) 276
11. A PRIMER ON ELECTRO-STATIC DISCHARGE 277
11.1. How Static Charges are Created 277
11.2. How Electro-Static Charges Cause Damage 278
11.3. Common Myths About ESD Damage 279
11.4. Basic Principles of Static Control 280
11.4.1. General Rules 280
11.4.2. Basic anti-ESD Procedures for Analyzer Repair and Maintenance 282
11.4.2.1. Working at the Instrument Rack 282
11.4.2.2. Working at an Anti-ESD Work Bench. 282
11.4.2.3. Transferring Components from Rack to Bench and Back 283
11.4.2.4. Opening Shipments from Teledyne API 283
11.4.2.5. Packing Components for Return to Teledyne API 284

LIST OF APPENDICES

APPENDIX A - VERSION SPECIFIC SOFTWARE DOCUMENTATION

APPENDIX B - T101 SPARE PARTS LIST

APPENDIX C - REPAIR QUESTIONNAIRE - T101

APPENDIX D - ELECTRONIC SCHEMATICS

LIST OF FIGURES

Figure 3-1. Front Panel Layout 27
Figure 3-2. Display Screen and Touch Control 27
Figure 3-3. Display/Touch Control Screen Mapped to Menu Charts 29
Figure 3-4. Rear Panel Layout 30
Figure 3-5. Internal Chassis Layout 32
Figure 3-6. Analog In Connector 33
Figure 3-7. Analog Output Connector 34
Figure 3-8. Current Loop Option Installed on the Motherboard 35
Figure 3-9. Status Output Connector 36
Figure 3-10. Control Input Connector 38
Figure 3-11. Pneumatic Connections, Basic Configuration Using Gas Dilution Calibrator 40
Figure 3-12. Pneumatic Connections, Basic Configuration Using Bottled Span Gas 41
Figure 3-13. Pneumatic Diagram of the T101 Standard Configuration 42
Figure 3-14. Basic Pneumatic Connections for Units with Valve Options 45
Figure 3-15. Pneumatic Diagram of the T101 With Z/S Option Installed 46
Figure 3-16. Pneumatic Diagram of the T101 with IZS Options Installed 49
Figure 4-1. Viewing T101 TEST Functions 60
Figure 4-2. Viewing and Clearing T101 WARNING Messages 62
Figure 4-3. Analog Output Connectors Defined 66
Figure 4-4. Setup for Calibrating Analog Outputs 91
Figure 4-5. Setup for Calibrating Current Outputs 93
Figure 4-6. DIAG – Analog Inputs (Option) Configuration Menu 96
Figure 4-7. Rear Panel Connector Pin-Outs for RS-232 Mode 105
Figure 4-8. CPU Connector Pin-Outs for RS-232 Mode 106
Figure 4-9. Jumper and Cables for Multidrop Mode 117
Figure 4-10.Multidrop PCA Host/Analyzer Interconnect Diagram 118
Figure 4-11. Default DAS Channels Setup 129
Figure 4-12. APICOM User Interface for Configuring the DAS 142
Figure 5-1. Status Output Connector 144
Figure 5-2. Control Inputs with Local 5 V Power Supply 146
Figure 5-3.Control Inputs with External 5 V Power Supply 146
Figure 5-4. APICOM Remote Control Program Interface 154
Figure 6-1. Setup for Manual Calibration without Z/S Valve or IZS Option 166
Figure 6-2. Setup for Manual Calibration with Z/S Valve Option Installed 170
Figure 6-3. Setup for Manual Calibration Check with Z/S Valve or IZS Option 175
Figure 6-4. Typical Setup for Manual Calibratio in Multigas Measurement Mode 178
Figure 8-1. Sample Particulate Filter Assembly 202
Figure 8-2. Charcoal Canister Assembly 205
Figure 8-3. H2S - SO2 Converter Assembly 208
Figure 8-4. Critical Flow Orifice Assembly 210
Figure 9-1. Viewing and Clearing Warning Messages 214
Figure 9-2. Example of Signal I/O Function 218
Figure 9-3. CPU Status Indicator 219
Figure 9-4. Shutter Assembly 236
Figure 9-5. Location of UV Reference Detector Potentiometer 237
Figure 9-6. Pre-Amplifier Board Layout 239
Figure 10-1. UV Absorption 245
Figure 10-2. UV Light Path 247
Figure 10-3. Source UV Lamp Construction 248
Figure 10-4. Excitation Lamp UV Spectrum Before/After Filtration 249
Figure 10-5. PMT Optical Filter Bandwidth 250
Figure 10-6. Effects of Focusing Source UV in Sample Chamber 250
Figure 10-7. T101 Gas Flow and Location of Critical Flow Orifice 254

Figure 10-8. Typical Flow Control Assembly with Critical Flow Orifice 256
Figure 10-9. T101 Hydrocarbon Scrubber (Kicker) 257
Figure 10-10. T101 Electronic Block Diagram 259
Figure 10-11. T101 CPU Board 261
Figure 10-12. T101 Sample Chamber 262
Figure 10-13. PMT Assembly 263
Figure 10-14. Basic PMT Design 264
Figure 10-15. PMT Cooling System 265
Figure 10-16. PMT Preamp Block Diagram 266
Figure 10-17. Relay Board Status LED Locations 268
Figure 10-18. Power Distribution Block Diagram 272
Figure 10-19. Front Panel and Display Interface Block Diagram 273
Figure 10-20. Basic Software Operation 274
Figure 11-1. Triboelectric Charging 277
Figure 11-2. Basic anti-ESD Work Station 280

LIST OF TABLES

Table 1-1. Analyzer Options 20
Table 2-1. Model T101 Basic Unit Specifications 23
Table 3-1. Display Screen and Touch Control Description 28
Table 3-2. Rear Panel Description 31
Table 3-3. Analog Input Pin Assignments 34
Table 3-4. Analog Output Pin Assignmentss 35
Table 3-5. Status Output Signals 37
Table 3-6. Control Input Signals 38
Table 3-7. Inlet / Outlet Connector Descriptions 40
Table 3-8. H_2S – SO_2 Switching Valve Operating States 42
Table 3-9. NIST-SRM's Available for Traceability of H_2S & SO_2 Calibration Gases 44
Table 3-10. Zero/Span Valve Operating States 46
Table 3-11. IZS Valve Operating States 49
Table 3-12. Possible Warning Messages at Start-Up 51
Table 4-1. Analyzer Operating Modes 57
Table 4-2. Test Functions Defined 59
Table 4-3. List of Warning Messages 61
Table 4-4. Primary Setup Mode Features and Functions 64
Table 4-5. Secondary Setup Mode Features and Functions 64
Table 4-6. Password Levels 74
Table 4-7. Variable Names (VARS) 77
Table 4-8. T101 Diagnostic (DIAG) Functions 81
Table 4-9. DIAG - Analog I/O Functions 85
Table 4-10. Analog Output Voltage Ranges 85
Table 4-11. Analog Output Current Loop Range 86
Table 4-12. Analog Output Pin Assignments 86
Table 4-13. Voltage Tolerances for Analog Output Calibration 90

Table 4-14. Current Loop Output Calibration with Resistor 94
Table 4-15. Test Parameters Available for Analog Output A4 102
Table 4-16. Ethernet Status Indicators 107
Table 4-17. LAN/Internet Default Configuration Properties 109
Table 4-18. Internet Configuration Touchscreen Button Functions 113
Table 4-19. COMM Port Communication Modes 121
Table 4-20. Front Panel LED Status Indicators for DAS 125
Table 4-21. DAS Data Channel Properties 126
Table 4-22. DAS Data Parameter Functions 127
Table 5-1. Status Output Pin Assignments 145
Table 5-2. Control Input Pin Assignments 145
Table 5-3. Terminal Mode Software Commands 147
Table 5-4. Command Types 148
Table 5-5. Serial Interface Documents 154
Table 5-6. Hessen RS-232 Communication Parameters 155
Table 5-7. T101 Hessen Protocol Response Modes 157
Table 5-8. Default Hessen Status Bit Assignments 160
Table 6-1. NIST-SRM's Available for Traceability of H2S and SO2 Calibration Gases 165
Table 6-2. AutoCal Modes 179
Table 6-3. AutoCal Attribute Setup Parameters 180
Table 6-4. Example Auto-Cal Sequence 181
Table 6-5. Example Auto-Cal Sequence 185
Table 7-1. Activity Matrix for Calibration Equipment & Supplies 188
Table 7-2. Activity Matrix for Calibration Procedure 189
Table 7-3. Activity Matrix 191
Table 7-4. Definition of Level 1 and Level 2 Zero and Span Checks 192
Table 8-1 T101 Preventive Maintenance Schedule 199
Table 8-2 Predictive Uses for Test Functions 201
Table 9-1. Warning Messages - Indicated Failures 214
Table 9-2. Test Functions - Possible Causes for Out-Of-Range Values 216
Table 9-3. Relay Board Status LEDs 220
Table 9-4. DC Power Test Point and Wiring Color Code 227
Table 9-5. DC Power Supply Acceptable Levels 227
Table 9-6. Relay Board Control Devices 229
Table 9-7. Analog Output Test Function - Nominal Values 229
Table 9-8. Status Outputs Check Pin Out 230
Table 9-9. Example of UV Lamp Power Supply Outputs 237

This page intentionally left blank.

1. INTRODUCTION

The Model T101 UV Fluorescence H_2S Analyzer measures hydrogen sulfide in levels commonly required for Ambient Air monitoring. The analyzer converts sulfur gases to sulfur dioxide and measures the SO_2 concentrations using fluorescence technology.

1.1. FEATURES

Some features of the T101 include:

- LCD Graphical User Interface with capacitive touch screen
- Microprocessor controlled for versatility
- Multi-tasking software allows viewing of test variables during operation
- Bi-directional USB, RS-232, and 100BaseT Ethernet ports for remote operation (optional RS-485)
- Front panel USB ports for peripheral devices
- Auto ranging, dual range and remote range selection
- Built in self checks and diagnostic capabilities
- Digital status outputs provide instrument condition
- Auto Zero System
- Adaptive signal filtering optimizes response time
- Temperature & pressure compensation
- Optional Calibration valves or permeation oven
- User friendly operation and set up
- Internal Zero Span
- Internal Datalogger
- Critical Orifices provide flow stability

1.2. OPTIONS

The options available for your analyzer are presented in Table 1-1 with name, option number, a description and/or comments, and if applicable, cross-references to technical details in this manual, such as setup and calibration. To order these options or to learn more about them, please contact the Sales department of Teledyne - Advanced Pollution Instruments at:

TOLL-FREE:	800-324-5190
TEL:	+1 858-657-9800
FAX:	+1 858-657-9816
E-MAIL:	apisales@teledyne.com
WEB SITE:	http://www.teledyne-api.com/

Table 1-1. Analyzer Options

Option	Option Number	Description / Notes
Pumps		**Pumps meet all typical AC power supply standards while exhibiting same pneumatic performance.**
	10A	External Pump 100V - 120V @ 60 Hz
	10B	External Pump 220V - 240V @ 50 Hz
	10C	External Pump 220V - 240V @ 60 Hz
	10D	External Pump 100V – 12V @ 50 Hz
	10E	External Pump 100V @ 60 Hz
	11A	Pumpless (if one is standard either internal or external)
	13	High Voltage Internal Pump 240V @ 50Hz
Rack Mount Kits		**Options for mounting the analyzer in standard 19” racks**
	20A	Rack mount brackets with 26 in. chassis slides
	20B	Rack mount brackets with 24 in. chassis slides
	21	Rack mount brackets only (compatible with carrying strap, Option 29)
	23	Rack mount for external pump pack (no slides)
Carrying Strap / Handle		**Side-mounted strap for hand-carrying analyzer**
	29	Extends from “flat” position to accommodate hand for carrying. Recesses to 9mm (3/8”) dimension for storage. Can be used with rack mount brackets, Option 21. Cannot be used with rack mount slides. **CAUTION** **GENERAL SAFETY HAZARD** **A FULLY LOADED T101 WITH VALVE OPTIONS WEIGHS >20 KG (45 POUNDS).** To avoid personal injury we recommend that two persons lift and carry the analyzer. Disconnect all cables and tubing from the analyzer before moving it.

Option	Option Number	Description / Notes		
Analog Inputs		Used for connecting external voltage signals from other instrumentation (such as meteorological instruments).		
	64	Also can be used for logging these signals in the analyzer's internal DAS		
Current Loop Analog Outputs		**Adds isolated, voltage-to-current conversion circuitry to the analyzer's analog outputs.**		
	41	Isolated 0-20 or 4-20 mA current output (up to three can be retrofitted if not installed at the factory)		
Parts Kits				
	42A			
	43	**Expendables Kit with IZS** includes the items needed to refurbish the internal zero air scrubber (IZS) that is included.		
	45	**Spare Parts Kit** includes spares parts for one unit.		
NO Optical Filter		**Recommended for High NOX backgrounds.**		
	47B	Required for EN Certification.		
Calibration Valves		**Used to control the flow of calibration gases generated from external sources, rather than manually switching the rear panel pneumatic connections.**		
	50A	Ambient Zero and Ambient Span		
	50G	Zero Scrubber and Internal Span Source (IZS)		
H_2S Permeation Tubes		**Replacement tubes for the IZS option; identical size / shape; different effusion rates.**		
		Effusion Rate (@ 50°C)	Approximate Concentration	Specified Flow Rate (of indicated perm tube rate)
(uncertified)	52A	106 ng/min	.08 -.12 ppm	0.76 lpm (nominal) ± 25%
(certified)	52E	76 ng/min	.04 - .06 ppm	0.76 lpm ± 5%
Communication Cables		**For remote serial, network and Internet communication with the analyzer.**		
		Type	Description	
	60A	RS-232	Shielded, straight-through DB-9F to DB-25M cable, about 1.8 m long. Used to interface with older computers or code activated switches with DB-25 serial connectors.	
	60B	RS-232	Shielded, straight-through DB-9F to DB-9F cable of about 1.8 m length.	
	60C	Ethernet	Patch cable, 2 meters long, used for Internet and LAN communications.	
	60D	USB	Cable for direct connection between instrument (rear panel USB port) and personal computer.	
Concentration Alarm Relay		**Issues warning when gas concentration exceeds limits set by user.**		
	61	Four (4) "dry contact" relays on the rear panel of the instrument. This relay option is different from and in addition to the "Contact Closures" that come standard on all TAPI instruments.		

Option	Option Number	Description / Notes
RS-232 Multidrop		**Enables communications between host computer and up to eight analyzers.**
	62	Multidrop card seated on the analyzer's CPU card. Each instrument in the multidrop network requires this card and a communications cable (Option 60B).
Special Features		**Built in features, software activated**
	N/A	**Maintenance Mode Switch**, located inside the instrument, places the analyzer in maintenance mode where it can continue sampling, yet ignore calibration, diagnostic, and reset instrument commands. This feature is of particular use for instruments connected to Multidrop or Hessen protocol networks. Call Technical Support for activation.
	N/A	**Second Language Switch** activates an alternate set of display messages in a language other than the instrument's default language. Call Technical Support for a specially programmed Disk on Module containing the second language.
	N/A	**Dilution Ratio Option** allows the user to compensate for diluted sample gas, such as in continuous emission monitoring (CEM) where the quality of gas in a smoke stack is being tested and the sampling method used to remove the gas from the stack dilutes the gas. Call Technical Support for activation.

2. SPECIFICATIONS AND APPROVALS

2.1. SPECIFICATIONS

Table 2-1. Model T101 Basic Unit Specifications

PARAMETER	DESCRIPTION
Ranges	H_2S: Min 0-50 ppb Full scale; Max 0-10 ppm Full scale SO_2: Up to 0-20 ppm Full scale (selectable, independent ranges and auto ranging supported)
Measurement Units	ppb, ppm, µg/m3, mg/m3 (selectable)
Zero Noise[1]	<0.2 ppb (RMS)
Span Noise[1]	<0.5% of reading (RMS) above 50 ppb
Lower Detectable Limit[2]	0.4 ppb
Zero Drift (24 hours)	<0.5 ppb
Span Drift (24 hours)	<0.5% of full scale
Lag Time	20 seconds
Rise/Fall Time[1]	<120 seconds to 95%
Linearity	1% of full scale
Precision	0.5% of reading above 50 ppb
Sample Flow Rate	650 cm^3/min ±10%
Temperature Coefficient	< 0.1% per °C
Voltage Coefficient	< 0.05% per V
Temperature Range	5-40°C
Humidity Range	0 - 95% RH, non-condensing
Dimensions H x W x D	7" x 17" x 23.5" (178 mm x 432 mm x 597 mm)
Weight, Analyzer (Basic Configuration)	41 lbs (18.3 kg) 45 lbs (20.5 kg) w/internal pump
AC Power	100V-120V, 60 Hz (202W); 220V-240V, 50 Hz (200W)
Analog Output Ranges	10 V, 5V, 1V, 0.1V (selectable)
Analog Output Resolution	1 part in 4096 of selected full-scale voltage
Recorder Offset	±10%
Environmental	Installation category (over-voltage category) II; Pollution degree 2

PARAMETER	DESCRIPTION
Standard I/O	1 Ethernet: 10/100Base-T 2 RS-232 (300 – 115,200 baud) 2 USB device ports 8 opto-isolated digital status outputs 6 opto-isolated digital control inputs 4 analog outputs
Optional I/O	1 USB com port 1 RS485 8 analog inputs (0-10V, 12-bit) 4 digital alarm outputs Multidrop RS232 3 4-20mA current outputs
For indoor use at altitudes ≤ 2000m only	

2.2. APPROVALS AND CERTIFICATIONS

The Teledyne API Model T101 analyzer was tested and certified for Safety and Electromagnetic Compatibility (EMC). This section presents the compliance statements for those requirements and directives.

2.2.1. SAFETY

IEC 61010-1:2001, Safety requirements for electrical equipment for measurement, control, and laboratory use.

CE: 2006/95/EC, Low-Voltage Directive

North American:
cNEMKO (Canada): CAN/CSA-C22.2 No. 61010-1-04
NEMKO-CCL (US): UL No. 61010-1 (2nd Edition)

2.2.2. EMC

EN 61326-1 (IEC 61326-1), Class A Emissions/Industrial Immunity
EN 55011 (CISPR 11), Group 1, Class A Emissions
FCC 47 CFR Part 15B, Class A Emissions
CE: 2004/108/EC, Electromagnetic Compatibility Directive

2.2.3. OTHER TYPE CERTIFICATIONS

For additional certifications, please contact Technical Support:

Toll-free Phone: 800-324-5190
Phone: 858-657-9800
Fax: 858-657-9816
Email: Sda_techsupport@teledyne.com

3. GETTING STARTED

3.1. UNPACKING AND INITIAL SETUP

CAUTION

To avoid personal injury, always use two persons to lift and carry the Model T101.

CAUTION – Avoid Warranty Invalidation

Printed circuit assemblies (PCAs) are sensitive to electro-static discharges too small to be felt by the human nervous system. Damage resulting from failure to use ESD protection when working with electronic assemblies will void the instrument warranty.

See *A Primer on Electro-Static Discharge* in this manual for more information on preventing ESD damage.

NOTE

Remove dust plugs prior to operating instrument. It is recommended that you store shipping containers/materials, including shipping screws and dust plugs for the pneumatic ports, for future use if/when the instrument should be returned to the factory for repair and/or calibration service. See Warranty section in this manual and shipping procedures on our Website at

http://www.teledyne-api.com under Customer Support > Return Authorization.

1. Inspect the received packages for external shipping damage. If damaged, please advise the shipper first, then Teledyne API.
2. Included with your analyzer is a printed record (Form number 04551) of the final performance characterization performed on your instrument at the factory. This record is an important quality assurance and calibration record for this instrument. It should be placed in the quality records file for this instrument.
3. Carefully remove the top cover of the analyzer and check for internal shipping damage.
   - Remove the set screw located in the top, center of the rear panel
   - Remove the screws fastening the top cover to the unit (four per side).
   - Lift the cover straight up.

4. Inspect the interior of the instrument to make sure all circuit boards and other components are in good shape and properly seated.
5. Check the connectors of the various internal wiring harnesses and pneumatic hoses to make sure they are firmly and properly seated.
6. Verify that all of the optional hardware ordered with the unit has been installed. These are checked on the paperwork (Form 04551) accompanying the analyzer.
7. **VENTILATION CLEARANCE**: Whether the analyzer is set up on a bench or installed into an instrument rack, be sure to leave sufficient ventilation clearance.

AREA	MINIMUM REQUIRED CLEARANCE
Back of the instrument	10 cm / 4 inches
Sides of the instrument	2.5 cm / 1 inch
Above and below the instrument.	2.5 cm / 1 inch

Various rack mount kits are available for this analyzer.

3.2. INSTRUMENT LAYOUT

Instrument layout includes front panel and display, rear panel connectors, and internal chassis layout.

3.2.1. FRONT PANEL

Figure 3-1 shows the analyzer's front panel layout, followed by a close-up of the display screen in Figure 3-2, which is described in Table 3-1. The two USB ports on the front panel are provided for the connection of peripheral devices:

- plug-in mouse (not included) to be used as an alternative to the touchscreen interface
- thumb drive (not included) to download updates to instruction software (contact TAPI Technical Support for information).

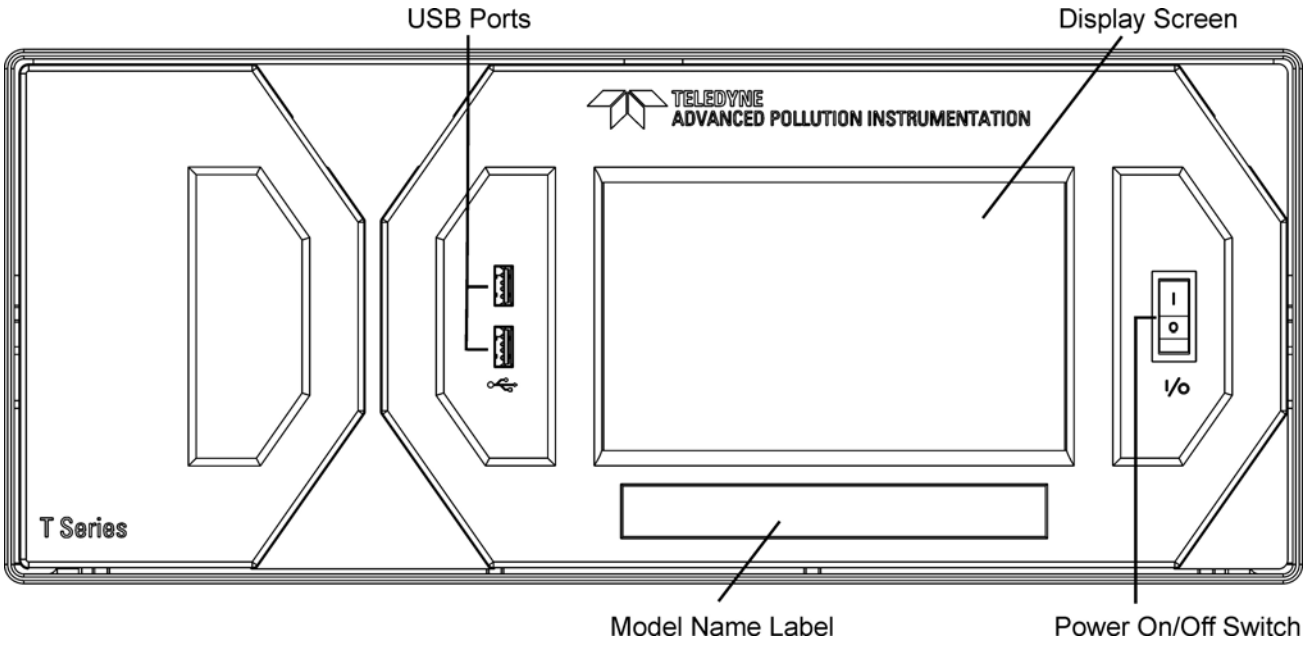

Figure 3-1. Front Panel Layout

Figure 3-2. Display Screen and Touch Control

CAUTION – Avoid Damaging Touchscreen
Do not use hard-surfaced instruments such as pens to operate the touchscreen.

The front panel liquid crystal display screen includes touch control. Upon analyzer start-up, the screen shows a splash screen and other initialization indicators before the main display appears, similar to Figure 3-2 above (may or may not display a Fault alarm). The LEDs on the display screen indicate the Sample, Calibration and Fault states; also on the screen is the gas concentration field (Conc), which displays real-time readouts for the primary gas and for the secondary gas if installed. The display screen also shows what mode the analyzer is currently in, as well as messages and data (Param). Along the bottom of the screen is a row of touch control buttons; only those that are currently applicable will have a label. Table 3-1 provides detailed information for each component of the screen.

Table 3-1. Display Screen and Touch Control Description

Field	Description / Function			
Status	LEDs indicating the states of Sample, Calibration and Fault, as follows:			
	Name	Color	State	Definition
	SAMPLE	Green	Off	Unit is not operating in sample mode, DAS is disabled.
			On	Sample Mode active; Front Panel Display being updated; DAS data being stored.
			Blinking	Unit is operating in sample mode, front panel display being updated, DAS hold-off mode is ON, DAS disabled
	CAL	Yellow	Off	Auto Cal disabled
			On	Auto Cal enabled
			Blinking	Unit is in calibration mode
	FAULT	Red	Off	No warnings exist
			Blinking	Warnings exist
Conc	Displays the actual concentration of the sample gas currently being measured by the analyzer in the currently selected units of measure			
Mode	Displays the name of the analyzer's current operating mode			
Param	Displays a variety of informational messages such as warning messages, operational data, test function values and response messages during interactive tasks.			
Control Buttons	Displays dynamic, context sensitive labels on each button, which is blank when inactive until applicable.			

Figure 3-3 shows how the front panel display is mapped to the menu charts illustrated in this manual. The Mode, Param (parameters), and Conc (gas concentration) fields in the display screen are represented across the top row of each menu chart. The eight touch control buttons along the bottom of the display screen are represented in the bottom row of each menu chart.

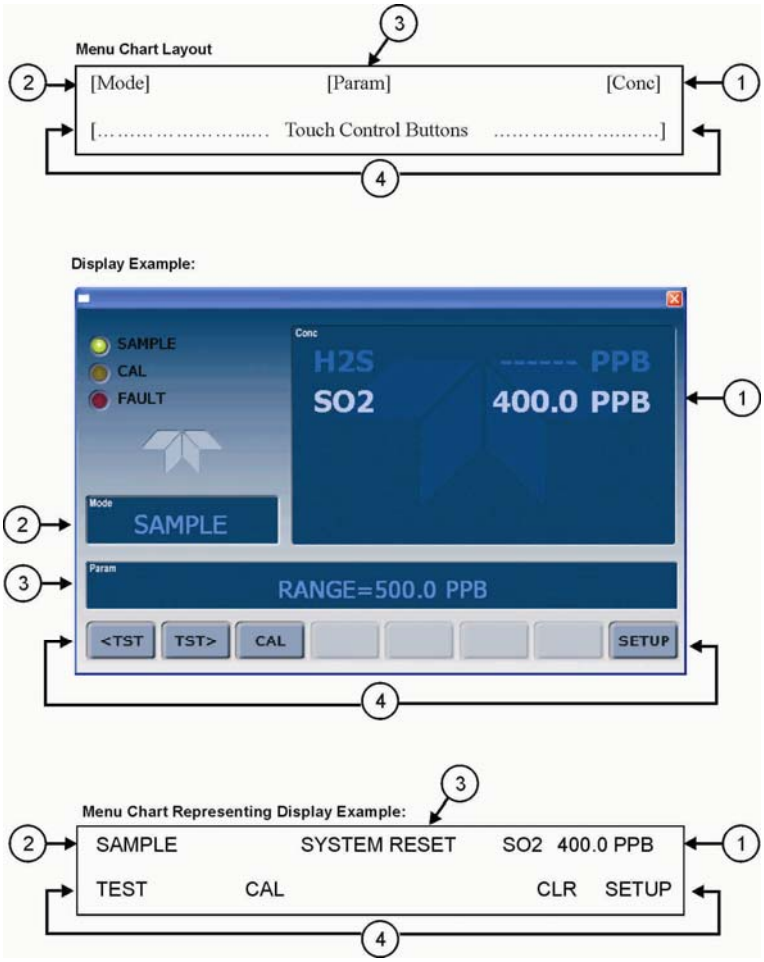

Figure 3-3. Display/Touch Control Screen Mapped to Menu Charts

3.2.2. REAR PANEL

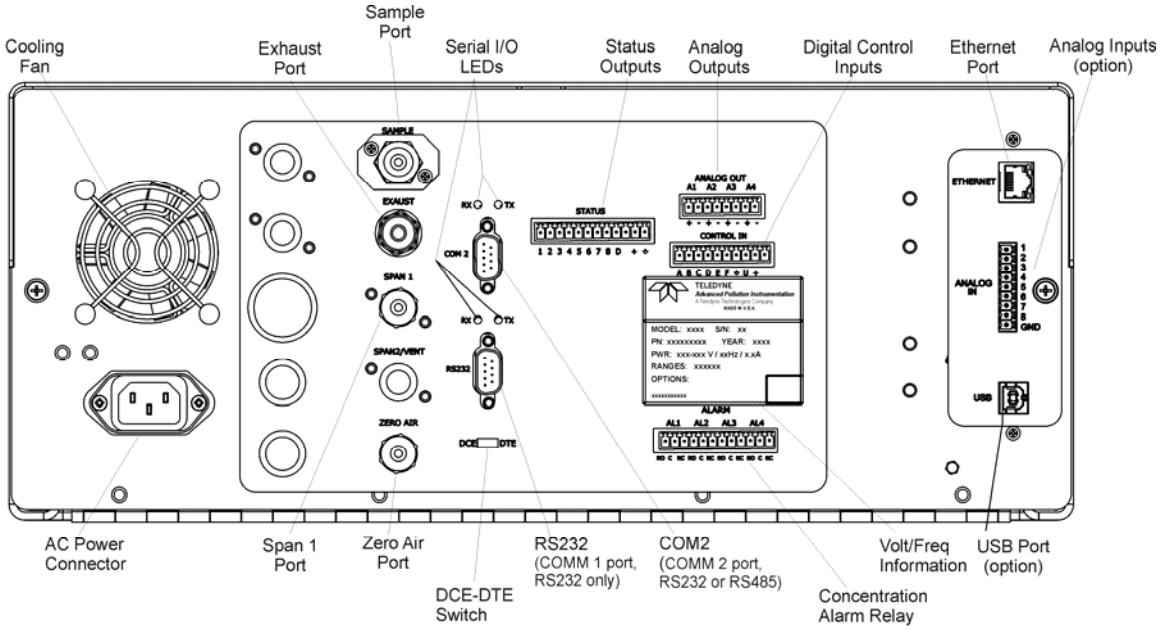

Figure 3-4. Rear Panel Layout

Table 3-2. Rear Panel Description

Component	Function
cooling fan	Pulls ambient air into chassis through side vents and exhausts through rear.
AC power connector	Connector for three-prong cord to apply AC power to the analyzer. **CAUTION! The cord's power specifications (specs) MUST comply with the power specs on the analyzer's rear panel Model number label**
SAMPLE	Connect a gas line from the source of sample gas here. Calibration gases are also inlet here on units without zero/span/shutoff valve options installed.
EXHAUST	Connect an exhaust gas line of not more than 10 meters long here that leads outside the shelter or immediate area surrounding the instrument.
SPAN 1	On units with zero/span/shutoff valve options installed, connect a gas line to the source of calibrated span gas here.
SPAN2/VENT	Used as a second cal gas input line when instrument is configured with zero/span valves and a dual gas option, or as a cal gas vent line when instrument is configured with a pressurized span option *(Call factory for details).*
ZERO AIR	Internal Zero Air: On units with zero/span/shutoff valve options installed but no internal zero air scrubber attach a gas line to the source of zero air here.
RX TX	LEDs indicate receive (RX) and transmit (TX) activity on the when blinking.
COM 2	Serial communications port for RS-232 or RS-485.
RS-232	Serial communications port for RS-232 only.
DCE DTE	Switch to select either data terminal equipment or data communication equipment during RS-232 communication.
STATUS	For outputs to devices such as Programmable Logic Controllers (PLCs).
ANALOG OUT	For voltage or current loop outputs to a strip chart recorder and/or a data logger.
CONTROL IN	For remotely activating the zero and span calibration modes.
ALARM	Option for concentration alarms and system warnings.
Information Label	Identifies the analyzer model number and provides power specifications
ETHERNET	Connector for network or Internet remote communication, using Ethernet cable
ANALOG IN	Option for external voltage signals from other instrumentation and for logging these signals
USB	Connector for direct connection to personal computer, using USB cable.

3.2.3. INTERNAL CHASSIS LAYOUT

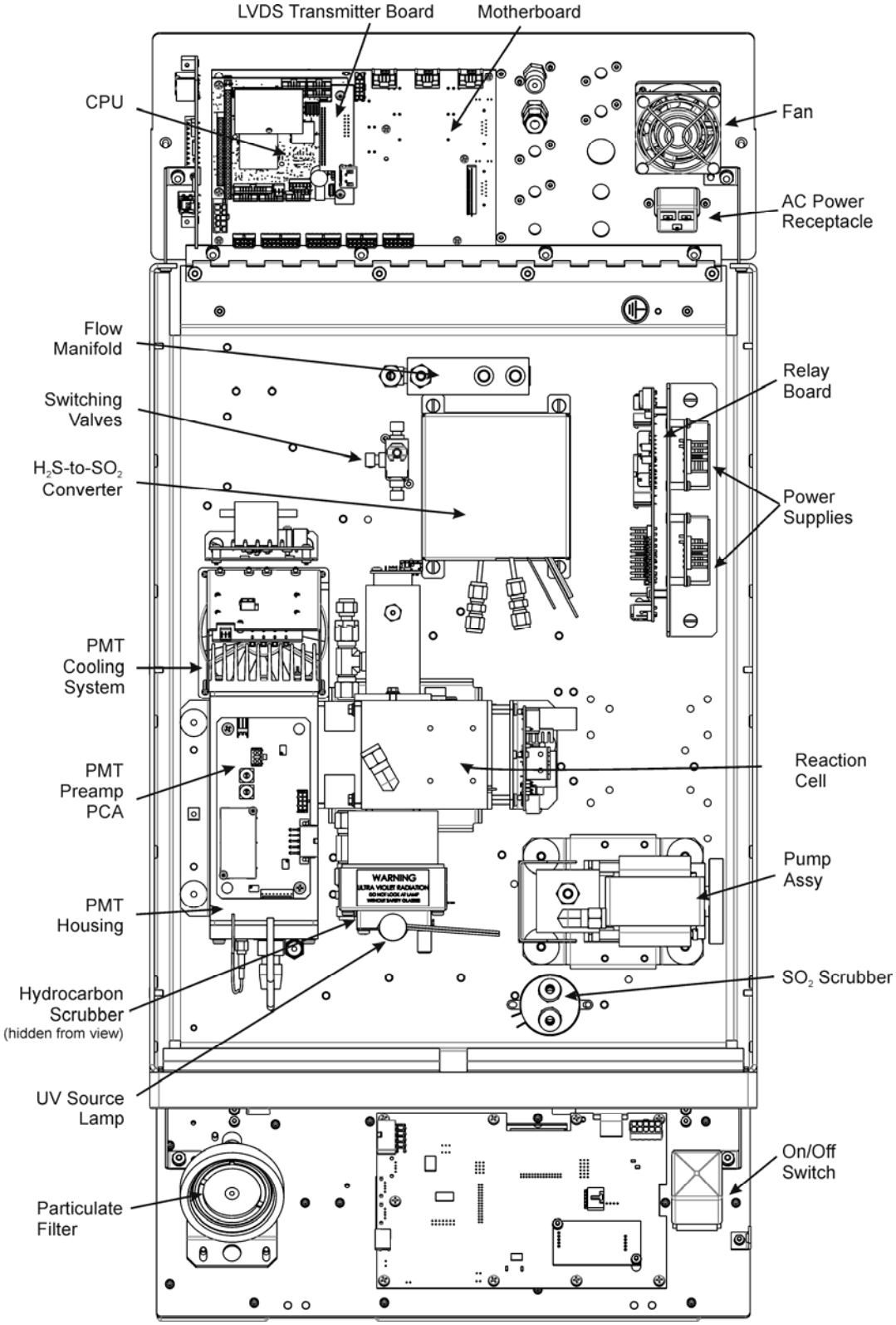

Figure 3-5. Internal Chassis Layout

3.3. ELECTRICAL CONNECTIONS

NOTE

To maintain compliance with EMC standards, it is required that the cable length be no greater than 3 meters for all I/O connections, which include Analog In, Analog Out, Status Out, Control In, Ethernet/LAN, USB, RS-232, and RS-485.

WARNING - ELECTRICAL SHOCK HAZARD

Never connect/disconnect PCAs, wiring harnesses or electronic subassemblies while under power. Never operate with cover off.

CAUTION

Check the voltage and frequency label on the rear panel of the instrument for compatibility with the local power before plugging the T101 into line power.

Do not plug in the power cord if the voltage or frequency is incorrect.

CAUTION

Power connection must have functioning ground connection. Do not defeat the ground wire on power plug.

3.3.1. ANALOG INPUTS (OPTION 64) CONNECTIONS

The Analog In connector is used for connecting external voltage signals from other instrumentation (such as meteorological instruments) and for logging these signals in the analyzer's internal DAS. The input voltage range for each analog input is 1-10 VDC, and the input impedance is nominally 20kΩ in parallel with 0.1µF.

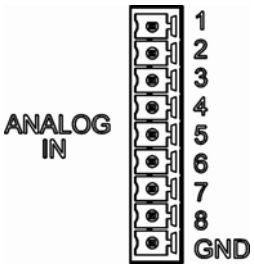

Figure 3-6. Analog In Connector

Pin assignments for the Analog In connector are presented in Table 3-3.

Table 3-3. Analog Input Pin Assignments

PIN	DESCRIPTION	DAS PARAMETER[1]
1	Analog input # 1	AIN 1
2	Analog input # 2	AIN 2
3	Analog input # 3	AIN 3
4	Analog input # 4	AIN 4
5	Analog input # 5	AIN 5
6	Analog input # 6	AIN 6
7	Analog input # 7	AIN 7
8	Analog input # 8	AIN 8
GND	Analog input Ground	N/A
[1] See Section 4.8 for details on setting up the DAS.		

3.3.2. CONNECTING THE ANALOG OUTPUTS

Attach a strip chart recorder and/or data-logger to the appropriate contacts of the analog output connecter on the rear panel of the analyzer.

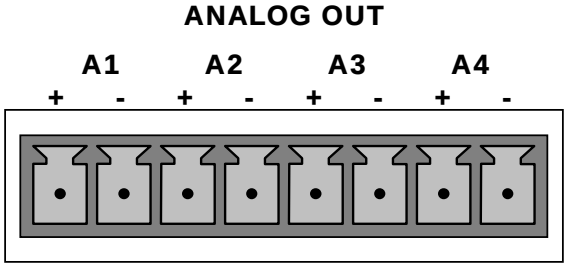

Figure 3-7. Analog Output Connector

The A1 and A2 channels output a signal that is proportional to the H_2S concentration of the sample gas.

The output, labeled **A4** is special. It can be set by the user (Section 4.6.9) to output any one of the parameters accessible through the **<TST TST>** buttons of the unit's Sample display.

Pin-outs for the Analog Output connector at the rear panel of the instrument are presented in Table 3-4.

Table 3-4. Analog Output Pin Assignmentss

PIN	ANALOG OUTPUT	VOLTAGE OUTPUT	CURRENT LOOP OPTION
1	A1	V Out	I Out +
2		Ground	I Out -
3	A2	V Out	I Out +
4		Ground	I Out -
5	A3	Not Available	I Out +
6		Not Available	I Out -
7	A4	V Out	Not Available
8		Ground	Not Available

The default analog output voltage setting of the T101 UV Fluorescence H_2S Analyzer is 0 – 5 VDC with a range of 0 – 500 ppb. To change these settings, see Sections 4.6.3 and 4.4.4 respectively.

An optional Current Loop output is available for each output.

3.3.2.1. Current Loop Analog Outputs (Option 41) Setup

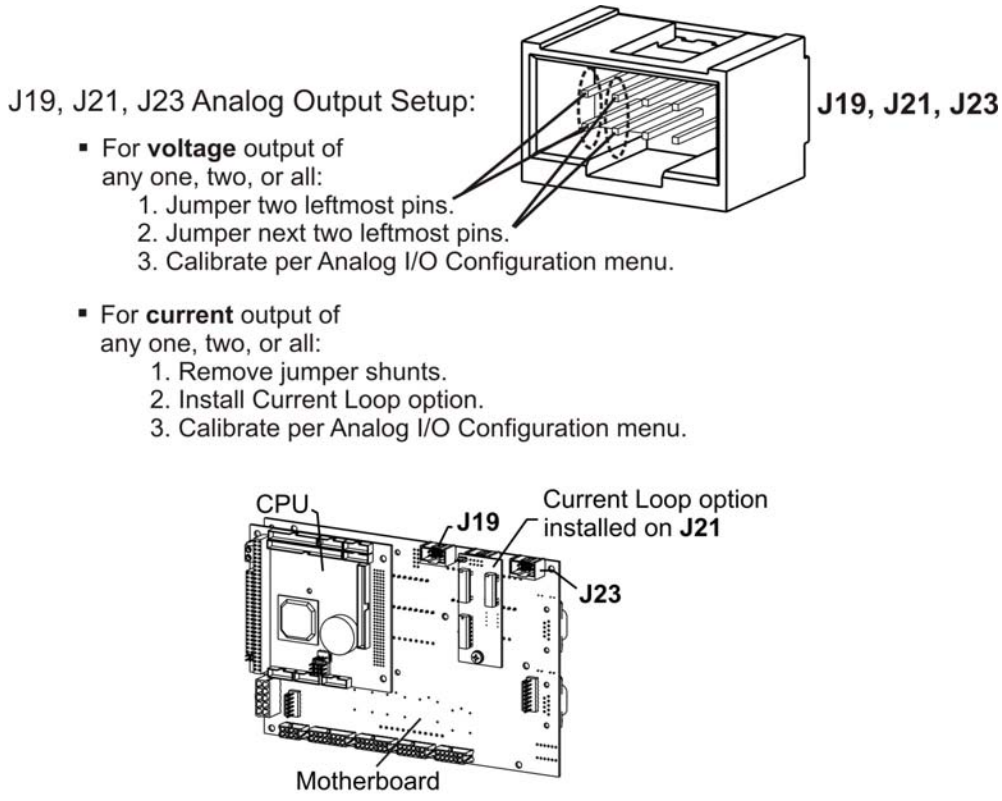

Figure 3-8. Current Loop Option Installed on the Motherboard

3.3.3. CONNECTING THE STATUS OUTPUTS

The analyzer's status outputs are accessed through a 12-pin connector on the analyzer's rear panel labeled STATUS. They are used to interface with a device that accepts closed-contact digital inputs, such as programmable logic controllers (PLC's).

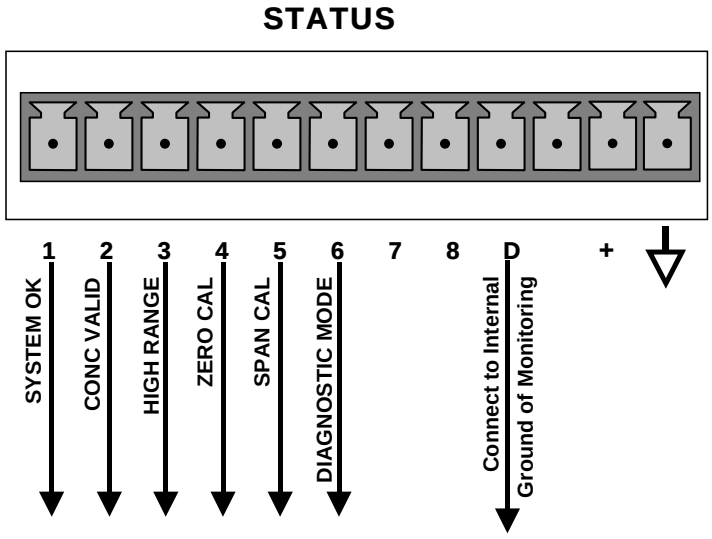

Figure 3-9. Status Output Connector

NOTE

Most PLCs have internal provisions for limiting the current the input will draw. When connecting to a unit that does not have this feature, external resistors must be used to limit the current through the individual transistor outputs to ≤50mA (120 Ω for 5V supply).

Table 3-5. Status Output Signals

REAR PANEL LABEL	STATUS DEFINITION	CONDITION
1	**SYSTEM OK**	ON if no faults are present.
2	**CONC VALID**	OFF any time the HOLD OFF feature is active, such as during calibration or when other faults exist possibly invalidating the current concentration measurement (example: sample flow rate is outside of acceptable limits). ON if concentration measurement is valid.
3	**HIGH RANGE**	ON if unit is in high range of the AUTO Range Mode
4	**ZERO CAL**	ON whenever the instrument's ZERO point is being calibrated.
5	**SPAN CAL**	ON whenever the instrument's SPAN point is being calibrated.
6	**DIAG MODE**	ON whenever the instrument is in DIAGNOSTIC mode
7 - 8	**SPARE**	
D	**EMITTER BUS**	The emitters of the transistors on pins 1-8 are bussed together.
	SPARE	
+	**DC POWER**	+ 5 VDC, 300 mA source (combined rating with Control Output, if used).
⏚	**Digital Ground**	The ground level from the analyzer's internal DC power supplies

3.3.4. CONNECTING THE CONTROL INPUTS

If you wish to use the analyzer to remotely activate the zero and span calibration modes, several digital control inputs are provided through a 10-pin connector labeled CONTROL IN on the analyzer's rear panel.

There are two methods for energizing the control inputs. The internal +5V available from the pin labeled "+" is the most convenient method. However, if full isolation is required, an external 5 VDC power supply should be used.

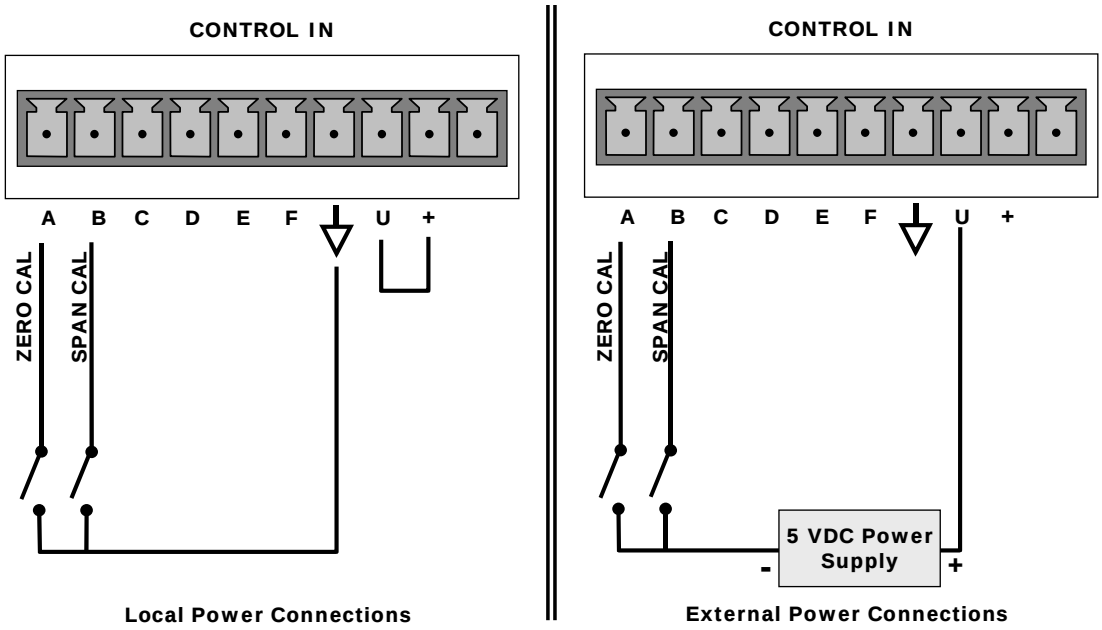

Figure 3-10. Control Input Connector

Table 3-6. Control Input Signals

INPUT #	STATUS DEFINITION	ON CONDITION
A	**REMOTE ZERO CAL**	The analyzer is placed in Zero Calibration mode. The mode field of the display will read ZERO CAL R.
B	**REMOTE LO SPAN CAL**	The analyzer is placed in low span calibration mode as part of performing a low span (midpoint) calibration. The mode field of the display will read LO CAL R.
C, D, E & F	**SPARE**	
⏚	**Digital Ground**	The ground level from the analyzer's internal DC power supplies (same as chassis ground)
U	**External Power input**	Input pin for +5 VDC required to activate pins A – F.
+	**5 VDC output**	Internally generated 5V DC power. To activate inputs A – F, place a jumper between this pin and the "U" pin. The maximum amperage through this port is 300 mA (combined with the analog output supply, if used).

3.3.5. CONNECTING THE COMMUNICATIONS PORTS

3.3.5.1. Connecting the Serial Ports

To utilize either of the analyzer's two serial interfaces, refer to Sections 4.7 and 5 of this manual for instructions on configuration and usage. For RS-485 communication, contact the factory.

3.3.5.2. Connecting to a LAN or the Internet

For network or Internet communication with the analyzer, connect an Ethernet cable from the analyzer's rear panel Ethernet interface connector to an Ethernet port. (DHCP setup is the default, Section 4.7.6.1; manual setup for static IP address is recommended: see Section 4.7.6.2).

3.3.5.3. Connecting to a Personal Computer (USB Option)

For direct communication between the analyzer and a personal computer (PC), connect a USB cable between the analyzer and desktop or laptop USB ports. (If this option is installed, the COM2 port can only be used for RS232 multidrop communication). See Section 4.7.7 for setup instructions.

3.3.5.4. Connecting to a Multidrop Network (Option)

If your unit has the Teledyne API RS-232 Multidrop Option card installed, see Section 4.7.8 for setup instructions.

3.4. PNEUMATIC CONNECTIONS

CAUTION!

Do not operate this instrument until you've removed dust plugs from SAMPLE and EXHAUST ports on the rear panel. (Plugs were inserted into the rear panel pneumatic fittings to prevent dust from getting into the analyzer. It is recommended that these dust plugs be stored for future use such as shipping or storage.

Sample and calibration gases should only come into contact with PTFE (Teflon) or glass materials. They should not come in contact with FEP or stainless steel materials.

Figure 3-11 and Figure 3-12 show the most common configurations for gas supply and exhaust lines to the Model T101 Analyzer. Figure 3-14 shows the connections for units with valve options installed.

Please refer to Figure 3-4 for pneumatic connections at the rear panel and Table 3-2 for their descriptions.

Table 3-7. Inlet / Outlet Connector Descriptions

REAR PANEL LABEL	FUNCTION
SAMPLE	Connects the sample gas to the analyzer. When operating the analyzer without zero span option, this is also the inlet for any calibration gases.
EXHAUST	Connects the exhaust of the analyzer with the external vacuum pump.
SPAN	On units with zero/span/shutoff valve options installed, connect a gas line to the source of calibrated span gas here.
ZERO AIR	On Units with zero/span valve or IZS option installed, this port connects the zero air gas or the zero air cartridge to the analyzer.

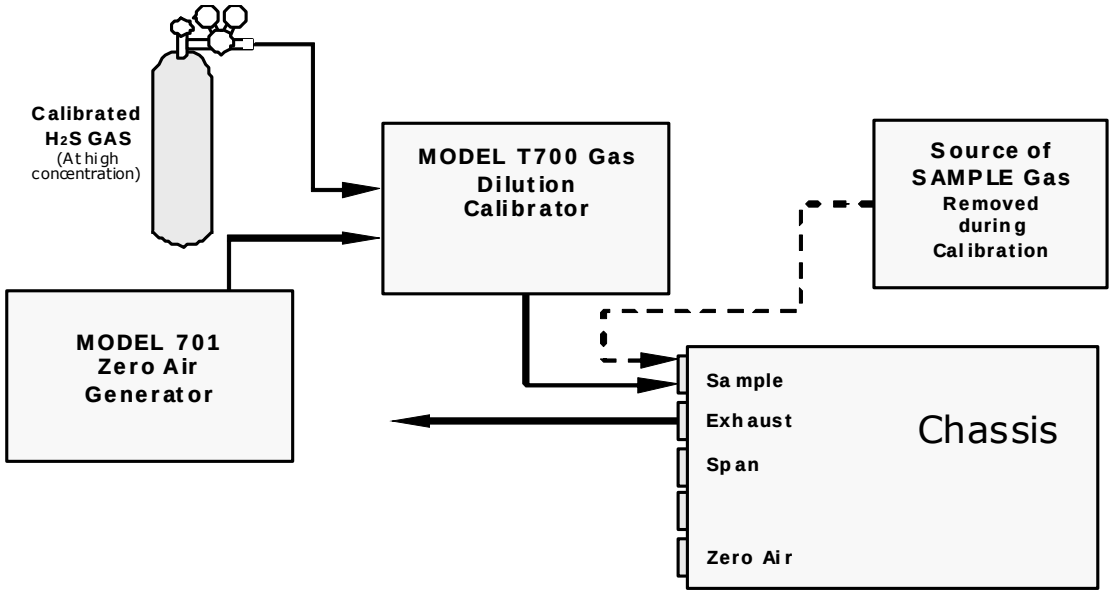

Figure 3-11. Pneumatic Connections, Basic Configuration Using Gas Dilution Calibrator

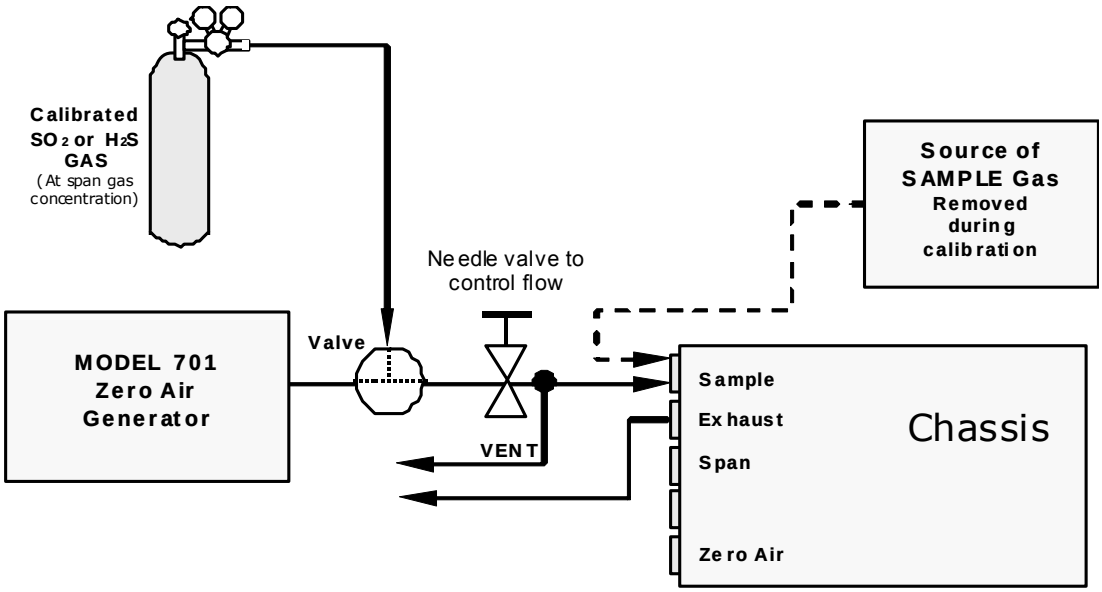

Figure 3-12. Pneumatic Connections, Basic Configuration Using Bottled Span Gas

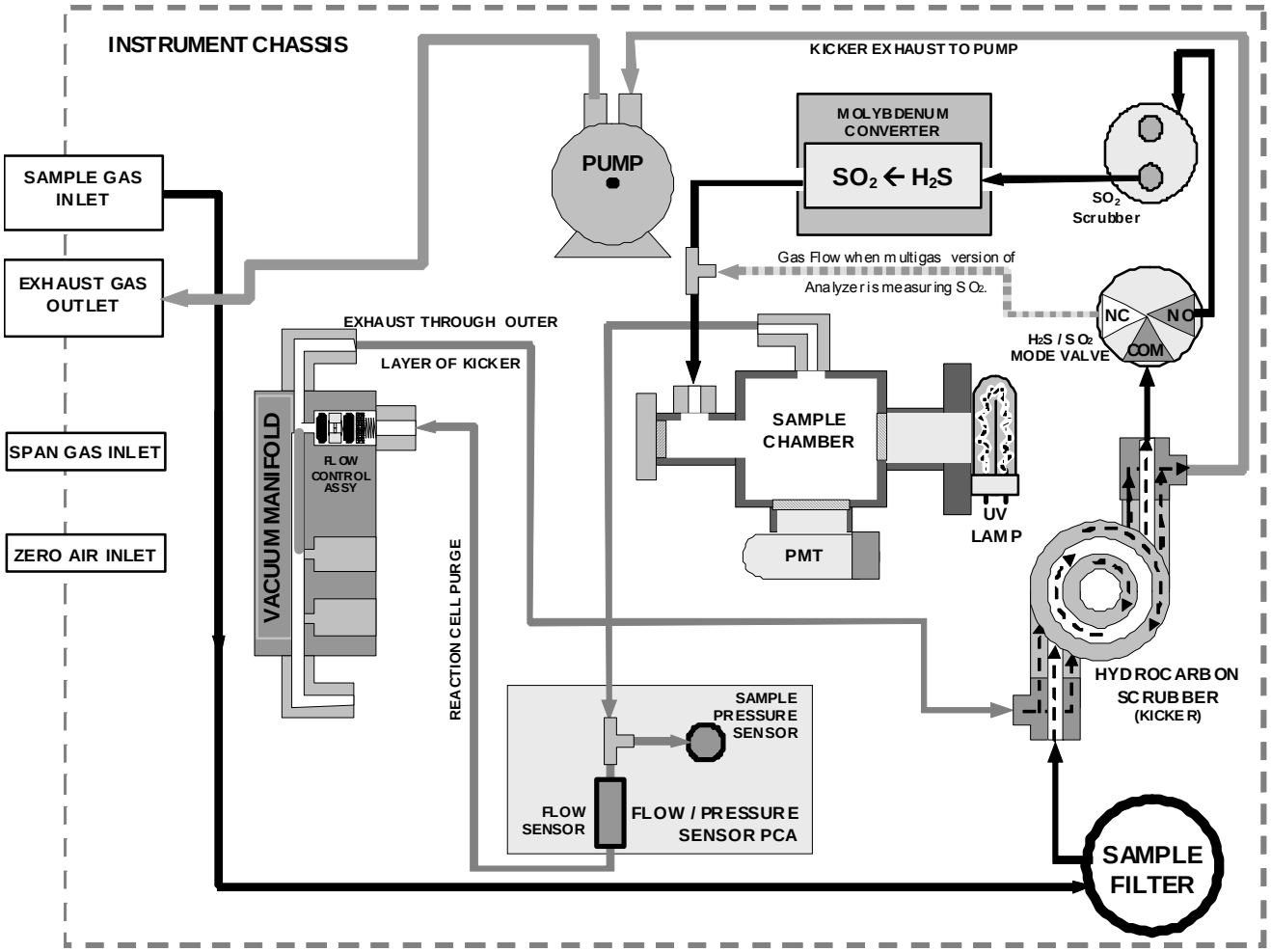

Figure 3-13. Pneumatic Diagram of the T101 Standard Configuration

Table 3-8. H_2S – SO_2 Switching Valve Operating States

GAS MODE	CONDITION OF H_2S –SO_2 SWITCHING VALVE	VALVE PORT CONNECTION
H_2S	Open to SO_2 Scrubber and Molybdenum Converter	**COM → NO**
SO_2	Open to directly to Sample Chamber. Bypasses SO_2 Scrubber and Molybdenum Converter	**COM → NC**
H_2S –SO_2	Switches between above two states every 10 minutes.	**- -**

1. Attach the 1/4" exhaust line to the EXHAUST port of the analyzer and to the inlet port of the pump.

CAUTION

The exhaust from the external pump needs to be vented outside the immediate area or shelter surrounding the instrument and conform to all safety requirements using a maximum of 10 meters of 1/4" PTFE tubing.

2. Attach the sample line to the SAMPLE inlet port. Ideally, the pressure of the sample gas should be equal to ambient atmospheric pressure.

NOTE

Maximum pressure of any gas at the sample inlet should not exceed 0.5 in-Hg above ambient pressure and ideally should equal ambient atmospheric pressure.

In applications where the sample gas is received from a pressurized manifold, a vent must be provided to equalize the sample gas with ambient atmospheric pressure before it enters the analyzer. The vented gas needs to be routed outside the immediate area or shelter surrounding the instrument.

3. Attach zero air and span gas supply lines as appropriate (see Figures 3-6 & 3.7). For this type of analyzer, zero air and span gas are defined as follows:

   Zero air and span gas inlets should supply their respective gases in excess of the 700 cc^3/min demand of the analyzer. Supply and vent lines should be of sufficient length and diameter to prevent back diffusion and pressure effects.

SPAN GAS

Span gas is specifically mixed to match the chemical composition of the type of gas being measured at near full scale of the desired measurement range. In the case of H_2S, measurements made with the Model T101 UV Fluorescence H_2S Analyzer it is recommended that you use a span gas with a H_2S concentration equal to 90% of the measurement range for your application.

EXAMPLE: If the application is to measure between 0 ppb and 500 ppb, an appropriate span gas concentration would be 450 ppb H_2S in air.

Cylinders of calibrated H_2S gas traceable to NIST-Standard Reference Material specifications (also referred to as SRM's or EPA protocol calibration gases) are commercially available. Table 3-5 lists specific NIST-SRM reference numbers for various concentrations of H_2S.

Some applications, such as EPA monitoring, require a multipoint calibration procedure where span gases of different concentrations are needed. We recommend using a bottle of calibrated H_2S gas of higher concentration in conjunction with a gas dilution calibrator such as a Teledyne API Model T700. This type of calibrator precisely mixes a high concentration gas from zero air (both supplied externally) to accurately produce span gas of the correct concentration. Linearity profiles can be automated with this model and run unattended over night.

Table 3-9. NIST-SRM's Available for Traceability of H_2S & SO_2 Calibration Gases

NIST-SRM[4]	TYPE	NOMINAL CONCENTRATION
2730	Hydrogen sulfide in N_2	5000 ppb
2731	Hydrogen sulfide in N_2	20 ppm
1693a	Sulfur dioxide in N_2	50 ppm
1694a	Sulfur dioxide in N_2	100 ppm
1661a	Sulfur dioxide in N_2	500 ppm

ZERO AIR

Zero air is similar in chemical composition to the earth's atmosphere but without the gas being measured by the analyzer, in this case H_2S. If your analyzer is equipped with an IZS or external zero air scrubber option, it is capable of creating zero air.

For analyzers without these options, a zero air generator such as the Teledyne API Model 701 can be used.

Once the appropriate pneumatic connections have been made, check all pneumatic fittings for leaks using a procedure similar to that defined in Section 9.5.1.

3.4.1.1. Connections with Internal Valve Options Installed

This section covers pneumatic connections for the optional valves, Z/S and IZS.

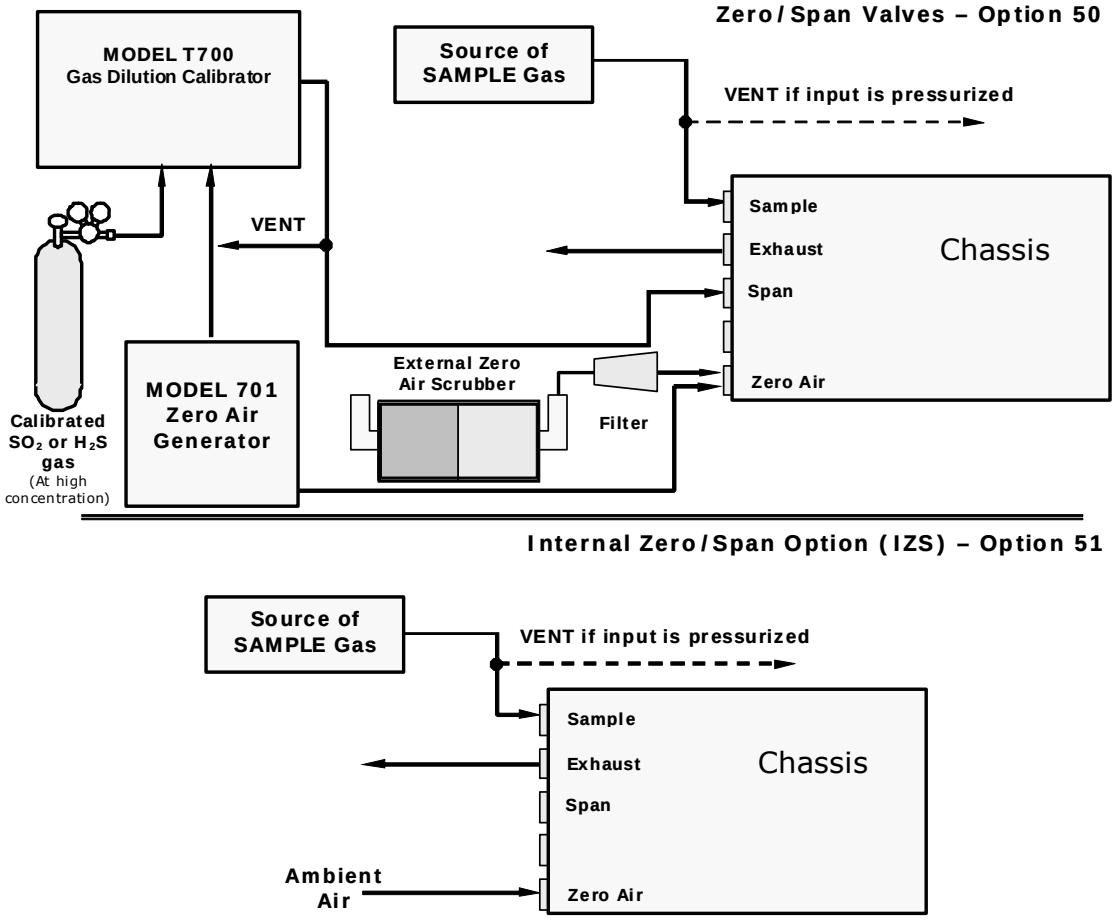

Figure 3-14. Basic Pneumatic Connections for Units with Valve Options

CAUTION

Gas flow must be maintained at all times for units with IZS Options installed. The IZS option includes a permeation tube which emits H_2S. Insufficient gas flow can build up H_2S to levels that will damage the instrument.

Remove the permeation device when taking the analyzer out of operation.

ZERO/SPAN (Z/S) VALVE GAS FLOW

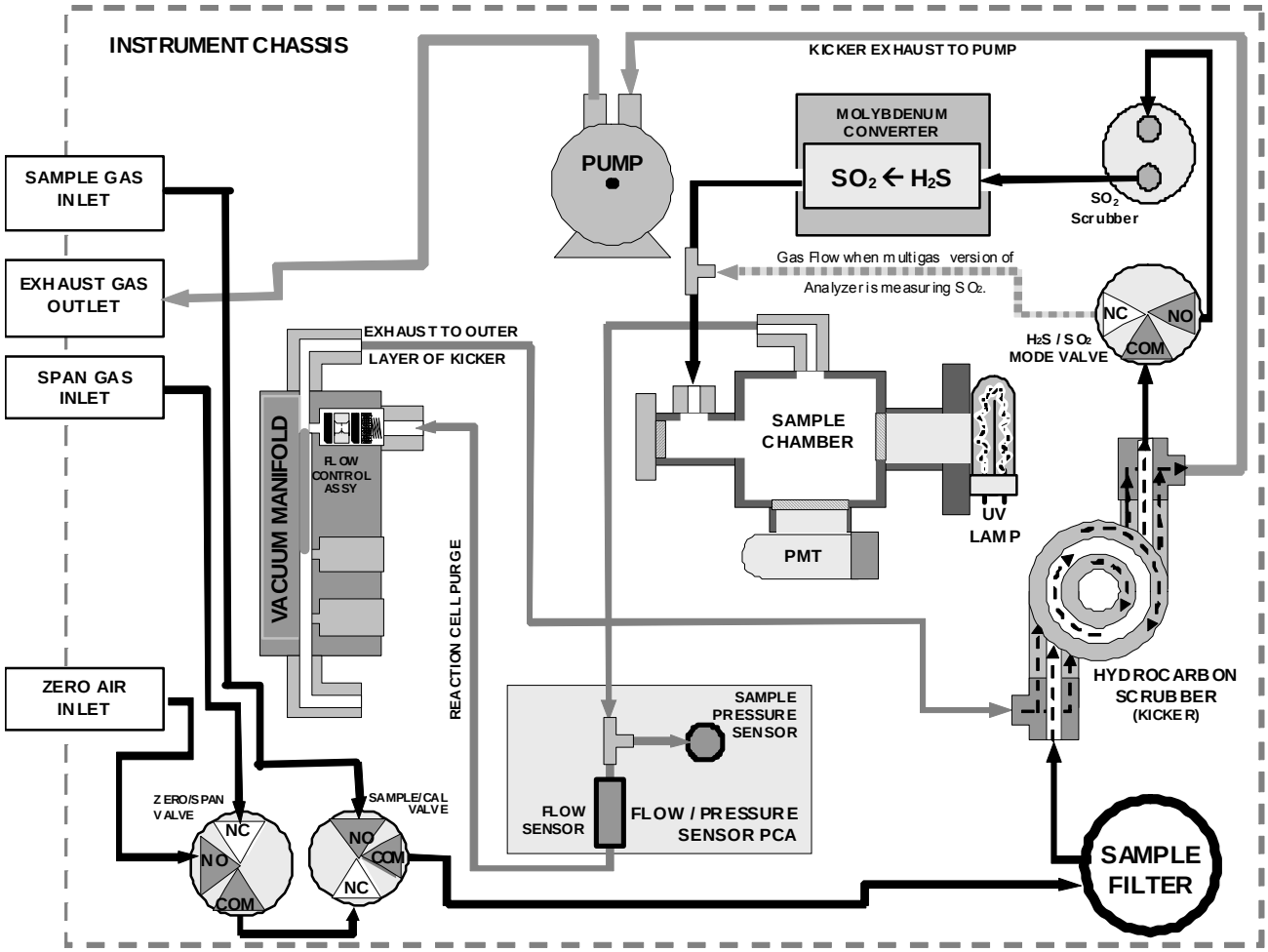

Figure 3-15. Pneumatic Diagram of the T101 With Z/S Option Installed

The following table describes the state of each valve during the analyzer's various operational modes.

Table 3-10. Zero/Span Valve Operating States

MODE	VALVE	CONDITION	VALVE PORT CONNECTION
SAMPLE	Sample/Cal	Open to SAMPLE inlet	**NO → COM**
	Zero/Span	Open to ZERO AIR inlet	**NO → COM**
ZERO CAL	Sample/Cal	Open to zero/span inlet	**NC → COM**
	Zero/Span	Open to ZERO AIR inlet	**NO → COM**
SPAN CAL	Sample/Cal	Open to zero/span inlet	**NC → COM**
	Zero/Span	Open to SPAN GAS inlet	**NC → COM**

The state of the zero/span valves can also be controlled:

- Manually from the analyzer's front panel by using the **SIGNAL I/O** controls located under the **DIAG** Menu (Section 4.6.1),
- By activating the instrument's AutoCal feature (Section 4.4.2),
- Remotely by using the external digital control inputs (Section 5.1.1.2 and Section 6.7.1), or
- Remotely through the RS-232/485 serial I/O ports (see Appendix A for the appropriate commands).

Sources of zero and span gas flow must be capable of supplying at least 600 cm^3/min. Both supply lines should be vented outside of the analyzer's enclosure. In order to prevent back-diffusion and pressure effects, these vent lines should be between 2 and 10 meters in length.

INTERNAL ZERO/SPAN (IZS) VALVE GAS FLOW

The T101 can be equipped with an internal zero air and span gas generator (IZS). This option includes a heated enclosure for a permeation tube for containing the calibration gas under high pressure (not included; H_2S perm tubes can be ordered from Teledyne API; SO_2 perm tubes must be ordered from a manufacturer), an external scrubber for producing zero air and a set of valves for switching between the sample gas inlet and the output of the zero/span subsystem, functionally very similar to the valves included in the zero/span valve option.

Sources of zero and span gas flow must be capable of supplying at least 600 cm^3/min. Both supply lines should be vented outside of the analyzer's enclosure. In order to prevent back-diffusion and pressure effects, these vent lines should be between 2 and 10 meters in length.

NOTE

The instrument can only be fitted with one type of permeation tube at a time. Therefore the IZS option can only be used to calibrate or check the instrument for one gas, H_2S or SO_2, but not both.

External Zero Air Scrubber

The IZS option includes an external zero air scrubber assembly that removes all H_2S the zero air source. The scrubber is filled with activated charcoal.

The Permeation Source

Span gas is created when zero air passes over a permeation tube containing liquid H_2S under high pressure, which slowly permeates through a PTFE membrane into the surrounding air. The speed at which the H_2S permeates the membrane is called the effusion rate. The concentration of the span gas is determined by three factors: membrane size, sample gas temperature, and zero air flow rate

Size of the membrane: The larger the area of the membrane, the more permeation occurs.

Temperature of the H_2S: Increasing the temperature of the increases the pressure inside the tube and therefore increases the effusion rate.

Flow rate of the zero air: If the previous two variables are constant, the permeation rate of the calibration gas into the zero air stream will be constant. Therefore, a lower flow rate of zero air produces higher concentrations of H_2S. The T101 usually has a constant flow rate and a constant permeation rate; hence, variations in concentration can be achieved by changing the IZS temperature.

NOTE

The permeation tube is not included in the IZS Option and must be ordered separately.

Permeation Tube Heater

In order to keep the permeation rate constant, the IZS enclosure is heated to a constant 50° C (10° above the maximum operating temperature of the instrument). The IZS heater is controlled by a precise PID (Proportional/Integral/Derivative) temperature control loop. A thermistor measures the actual temperature and reports it to the CPU for control feedback.

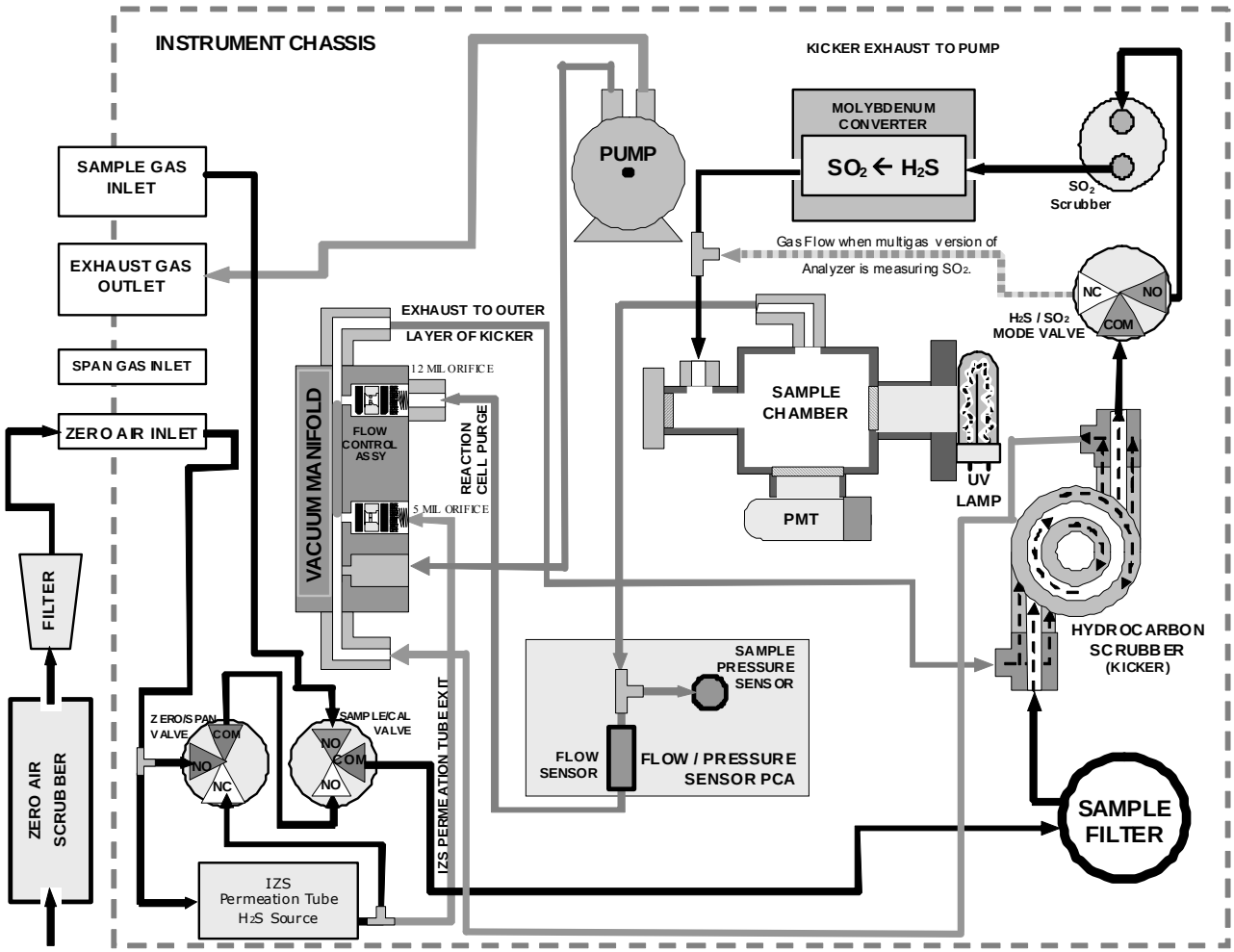

Figure 3-16. Pneumatic Diagram of the T101 with IZS Options Installed

The following table describes the state of each valve during the analyzer's various operational modes.

Table 3-11. IZS Valve Operating States

MODE	VALVE	CONDITION	VALVE PORT CONNECTIONS
SAMPLE	Sample/Cal	Open to SAMPLE inlet	NO → COM
	Zero/Span	Open to ZERO AIR inlet	NO → COM
ZERO CAL	Sample/Cal	Open to zero/span valve	NC → COM
	Zero/Span	Open to ZERO AIR inlet	NO → COM
SPAN CAL	Sample/Cal	Open to zero/span valve	NC → COM
	Zero/Span	Open to SPAN GAS inlet	NC → COM

The state of the IZS valves can also be controlled:

- Manually from the analyzer's front panel by using the **SIGNAL I/O** controls located under the **DIAG** Menu (Section 4.6.1),
- By activating the instrument's AutoCal feature (Section 6.9),
- Remotely by using the external digital control inputs (Section 5.1.1.2 and Section 6.7.1), or
- Remotely through the RS-232/485 serial I/O ports (see Appendix A-6 for the appropriate commands).

3.5. STARTUP, FUNCTIONAL CHECKS, AND INITIAL CALIBRATION

If you are unfamiliar with the T101 theory of operation, we recommend that you read Section 10 before proceeding.

For information on navigating the analyzer's software menus, see the menu trees described in Appendix A.1.

3.5.1. STARTUP

After the electrical and pneumatic connections are made, an initial functional check is in order. Turn on the instrument. The pump and exhaust fan should start immediately. The front panel display screen will briefly show a logo splash screen at the start of initialization.

The analyzer should automatically switch to Sample Mode after completing the boot-up sequence and start monitoring H_2S gas. However, there is an approximately one hour warm-up period before reliable gas measurements can be taken. During the warm-up period, the front panel display may show messages in the Parameters field.

3.5.2. WARM-UP

Allow a 60-minute warm-up period before collecting sample data.

3.5.3. WARNING MESSAGES

Because internal temperatures and other conditions may be outside of specified limits during the analyzer's warm-up period, the software will suppress most warning conditions for 60 minutes after power up.

If warning messages persist after 60 minutes, investigate their cause using the troubleshooting guidelines in Section 9. The following table includes a brief description of the various warning messages that may appear.

Table 3-12. Possible Warning Messages at Start-Up

WARNING MESSAGE	MEANING
ANALOG CAL WARNING	The instrument's A/D circuitry or one of its analog outputs is not calibrated.
BOX TEMP WARNING	The temperature inside the T101 chassis is outside the specified limits.
CANNOT DYN SPAN	Remote span calibration failed while the dynamic span feature was set to active
CANNOT DYN ZERO	Remote zero calibration failed while the dynamic zero feature was set to active
CONFIG INITIALIZED	Configuration was reset to factory defaults or was erased.
SHUTTER WARNING	Dark offset above limit specified indicating that too much stray light is present in the sample chamber.
DATA INITIALIZED	DAS data storage was erased.
HVPS WARNING	High voltage power supply for the PMT is outside of specified limits.
IZS TEMP WARNING	On units with IZS options installed: The permeation tube temperature is outside of specified limits.
PMT DET WARNING	PMT detector output outside of operational limits.
PMT TEMP WARNING	PMT temperature is outside of specified limits.
RCELL TEMP WARNING	Sample chamber temperature is outside of specified limits.
REAR BOARD NOT DET	The CPU is unable to communicate with the motherboard.
RELAY BOARD WARN	The firmware is unable to communicate with the relay board.
SAMPLE FLOW WARN	The flow rate of the sample gas is outside the specified limits.
SAMPLE PRESS WARN	Sample pressure outside of operational parameters.
SYSTEM RESET	The computer was rebooted.
UV LAMP WARNING	The UV lamp intensity measured by the reference detector reading too low or too high

To view and clear warning messages:

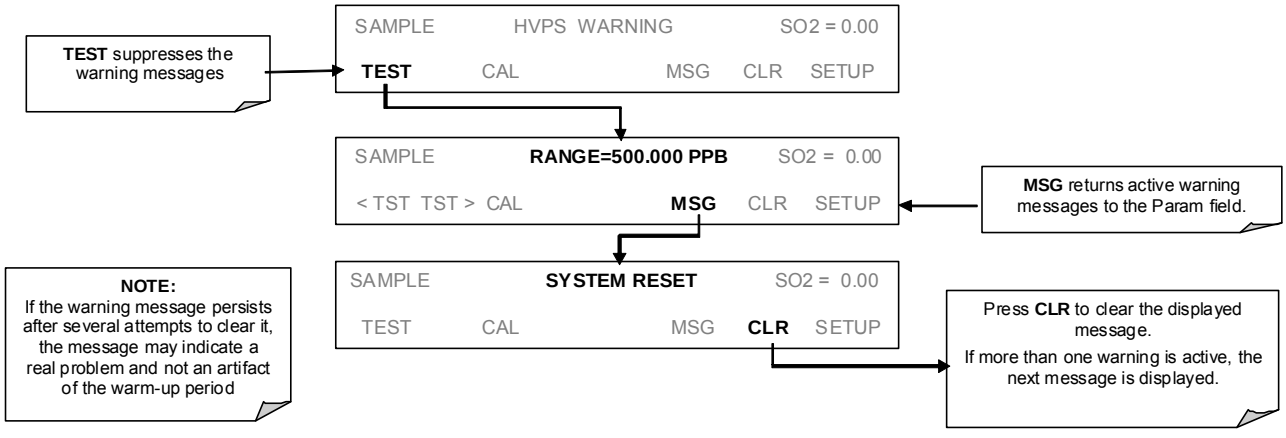

3.5.4. FUNCTIONAL CHECK

1. After the analyzer's components have warmed up for at least 30 minutes, verify that the software properly supports any hardware options that were installed.
2. Check to make sure that the analyzer is functioning within allowable operating parameters. Appendix C includes a list of test functions viewable from the analyzer's front panel as well as their expected values. These functions are also useful tools for diagnosing performance problems with your analyzer (Section 9.1.2). The enclosed Final Test and Validation Data sheet (part number 04551) lists these values before the instrument left the factory.

   To view the current values of these parameters press the following button sequence on the analyzer's front panel. Remember until the unit has completed its warm up these parameters may not have stabilized.

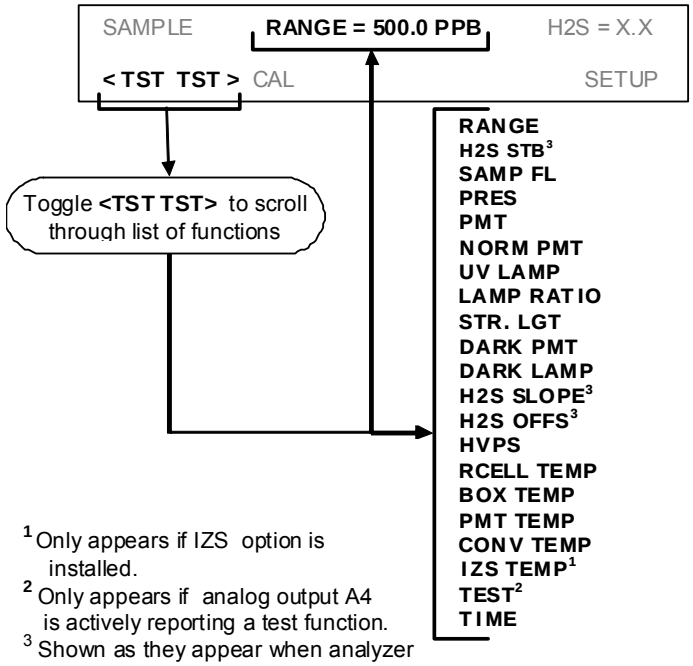

[1] Only appears if IZS option is installed.
[2] Only appears if analog output A4 is actively reporting a test function.
[3] Shown as they appear when analyzer is in H_2S mode. In SO_2 mode appear as **SO2 STB**, **SO2 OFFS** & **SO2 SLOPE**. In multigas mode, both versions appear.

NOTE

Once you have completed the above set-up procedures, please fill out the Quality Questionnaire that was shipped with your unit and return it to Teledyne API.

This information is vital to our efforts in continuously improving our service and our products.

THANK YOU.

3.6. INITIAL CALIBRATION

3.6.1. BASIC CALIBRATION PROCEDURE

The following three-step procedure assumes that the instrument does not have any of the available zero/span (Z/S) or IZS valve options installed. Section 6 contains instructions for calibrating instruments with valve options.

The initial calibration should be carried out with the analyzer's reporting range for **SINGLE** range mode with a range span of **500 PPB** (factory default settings for most units). This will enable you to compare your results to the factory calibration.

STEP ONE: Set/verify the analog output reporting range of the T101:

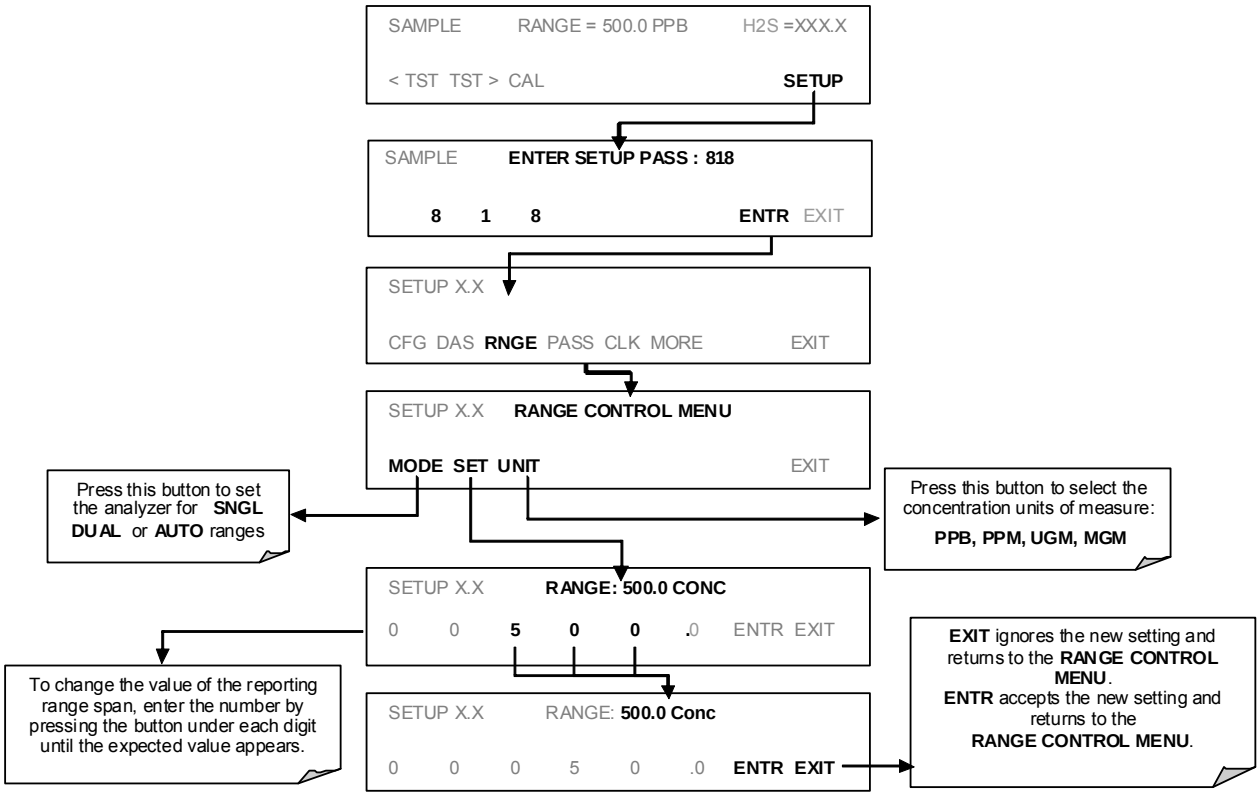

STEP TWO: Set the expected H_2S span gas concentration.

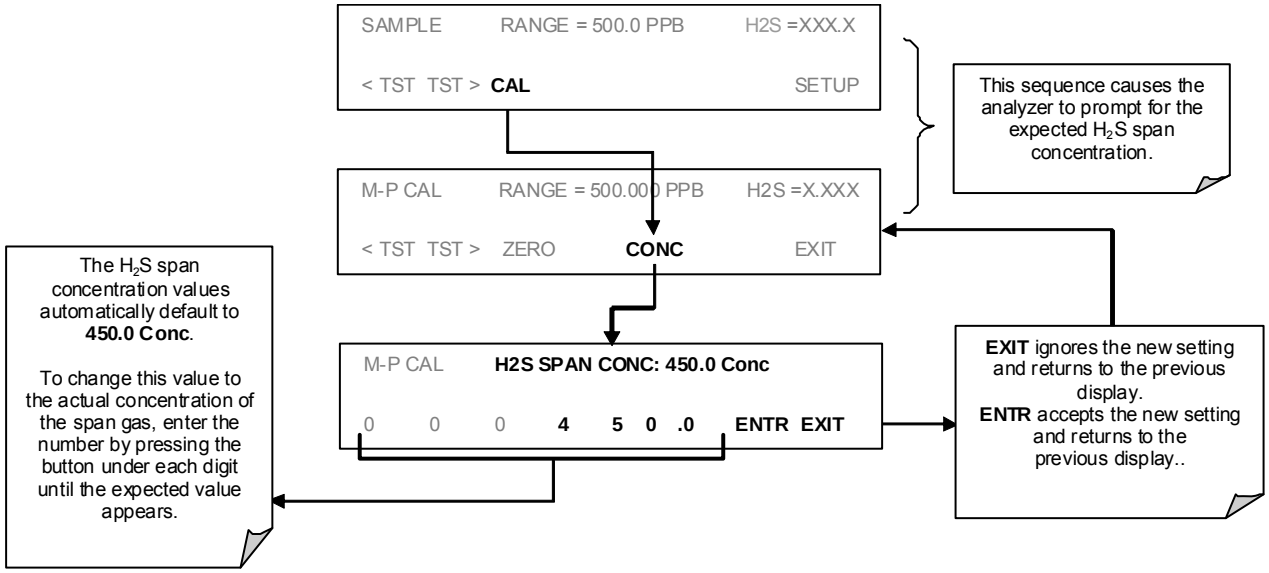

STEP THREE: Perform the zero/span calibration procedure:

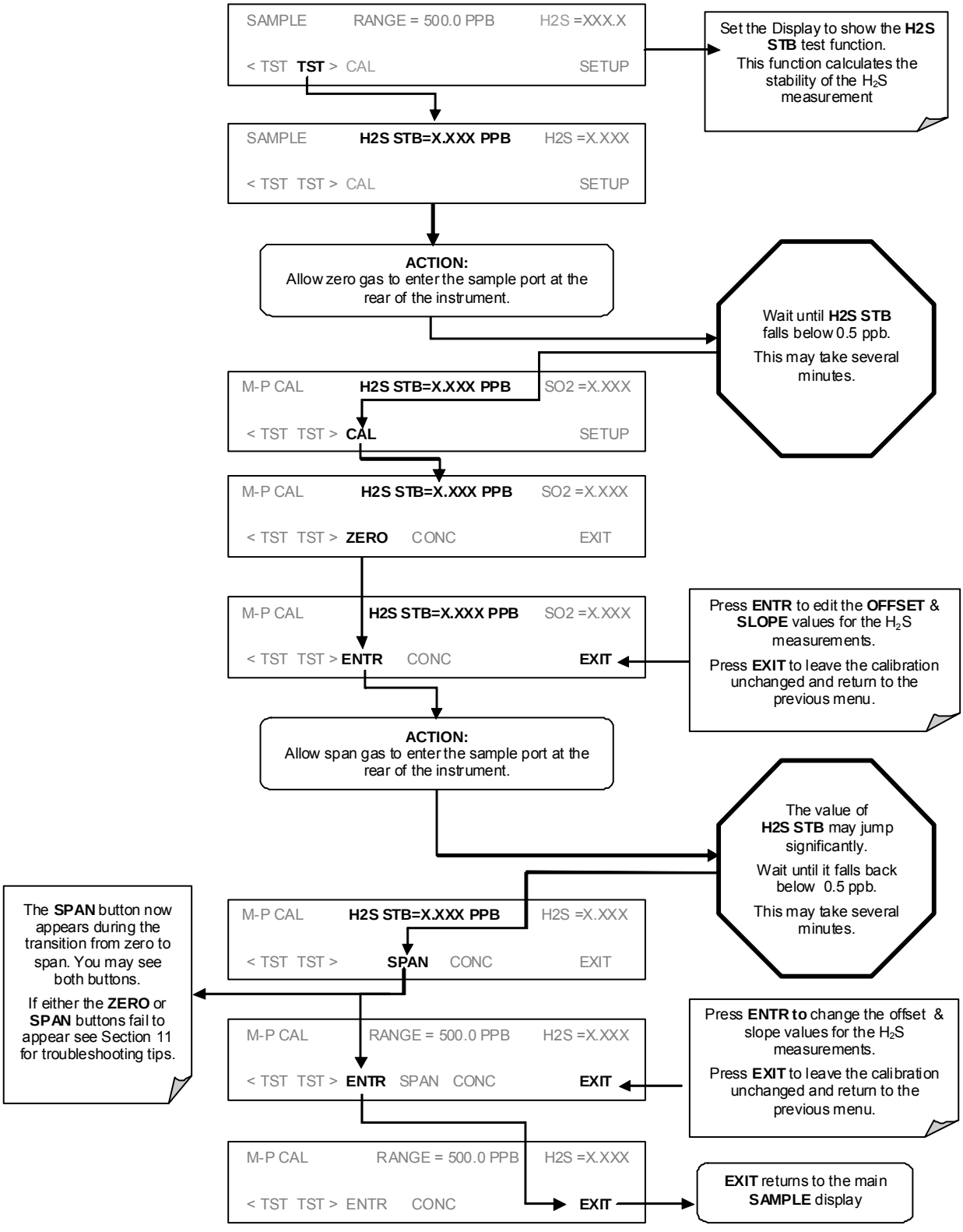

The Model T101 analyzer is now ready for operation.

3.6.2. INTERFERENCES FOR H_2S MEASUREMENTS

It should be noted that the fluorescence method for detecting H_2S is subject to interference from a number of sources. Since the T101 converts H_2S into SO_2 and measures the UV fluorescence of the SO_2, the most common source of interference is from other gases that fluoresce in a similar fashion to SO_2, when exposed to UV Light such poly-nuclear aromatics (PNA), of which certain hydrocarbons such as meta-xylene and naphthalene are the most pervasive. The T101 has been successfully tested for its ability to reject interference from most of these sources.

For a more detailed discussion of this topic, see Section 10.2.6.

NOTE

Once you have completed the above set-up procedures, please fill out the quality questionnaire that was shipped with your unit and return it to Teledyne API. This information is vital to our efforts in continuously improving our service and our products. Thank you.

.

4. OPERATING INSTRUCTIONS

The T101 is a micro-computer-controlled analyzer with a dynamic menu interface for easy and yet powerful and flexible operation. All major operations are controlled from the front panel touch screen control.

To assist in navigating the system's software, a series of menu trees can be found in Appendix A of this manual.

NOTE

The ENTR button may disappear if you select a setting that is invalid or out of the allowable range for that parameter, such as trying to set the 24-hour clock to 25:00:00. Once you adjust the setting to an allowable value, the ENTR button will reappear.

4.1. OVERVIEW OF OPERATING MODES

The T101 software has a variety of operating modes. Most commonly, the analyzer will be operating in **SAMPLE** mode. In this mode, a continuous read-out of the H_2S concentration is displayed on the front panel and output as an analog voltage from rear panel terminals, calibrations can be performed, and **TEST** functions and **WARNING** messages can be examined.

The second most important operating mode is **SETUP** mode. This mode is used for performing certain configuration operations, such as for the DAS system, the reporting ranges, or the serial (RS-232/RS-485/Ethernet) communication channels. The **SET UP** mode is also used for performing various diagnostic tests during troubleshooting.

The Mode field of the front panel display indicates to the user which operating mode the unit is currently running.

In addition to **SAMPLE** and **SETUP**, other modes the analyzer can be operated in are:

Table 4-1. Analyzer Operating Modes

MODE	DESCRIPTION
DIAG	One of the analyzer's diagnostic modes is active (Section 4.6).
M-P CAL	This is the basic calibration mode of the instrument and is activated by pressing the CAL button.
SAMPLE	Sampling normally, flashing text indicates adaptive filter is on.
SAMPLE A	Indicates that unit is in SAMPLE mode and AUTOCAL feature is activated.

MODE	DESCRIPTION
SETUP X.#[2]	SETUP mode is being used to configure the analyzer. The gas measurement will continue during this process.
SPAN CAL A[1]	Unit is performing SPAN calibration initiated automatically by the analyzer's AUTOCAL feature
SPAN CAL M[1]	Unit is performing SPAN calibration initiated manually by the user.
SPAN CAL R[1]	Unit is performing SPAN calibration initiated remotely through the COM ports or digital control inputs.
ZERO CAL A[1]	Unit is performing ZERO calibration procedure initiated automatically by the AUTOCAL feature
ZERO CAL M[1]	Unit is performing ZERO calibration procedure initiated manually by the user.
ZERO CAL R[1]	Unit is performing ZERO calibration procedure initiated remotely through the COM ports or digital control inputs.
[1] Only Appears on units with Z/S valve or IZS options [2] The revision of the analyzer firmware is displayed following the word SETUP, e.g., SETUP c.4	

Finally, the various CAL modes allow calibration of the analyzer. Calibration is described in Section 6.

4.2. SAMPLE MODE

This is the analyzer's standard operating mode. In this mode, the instrument is analyzing H_2S and calculating concentrations.

4.2.1. TEST FUNCTIONS

A series of test functions is available at the front panel while the analyzer is in **SAMPLE** mode. These parameters provide information about the present operating status of the instrument and are useful during troubleshooting (Section 9.1.2). They can also be recorded in one of the DAS channels (Section 4.8) for data analysis. To view the test functions, press one of the **<TST TST>** buttons repeatedly in either direction.

Table 4-2. Test Functions Defined

DISPLAY	PARAMETER	UNITS	DESCRIPTION
RANGE	Range - - Range1 Range2	PPB, PPM, UGM & MGM	The full scale limit at which the reporting range of the analyzer's ANALOG OUTPUTS are currently set. THIS IS NOT the physical range of the instrument. If IND or AUTO Range modes have been selected, two RANGE functions will appear, one for each range.
H2S STB[1]	Stability	PPB	Standard deviation of H_2S Concentration readings. Data points are recorded every ten seconds. The calculation uses the last 25 data points.
SAMP FL	Sample Flow	cm^3/min (cc/m)	The flow rate of the sample gas through the sample chamber.
PRES	Sample Pressure	in-Hg-A	The current pressure of the sample gas as it exits the sample chamber, measured after the sample chamber.
PMT	PMT Signal	mV	The raw output voltage of the PMT.
NORM PMT	NORMALIZED PMT Signal	mV	The output voltage of the PMT after normalization for temperature/pressure compensation (if activated).
UV LAMP	Source UV Lamp Intensity	mV	The output voltage of the UV reference detector.
LAMP RATIO	UV Source lamp ratio	%	The current output of the UV reference detector divided by the reading stored in the CPU's memory from the last time a UV Lamp calibration was performed.
STR. LGT	Stray Light	ppb	The offset due to stray light recorded by the CPU during the last zero-point calibration performed.
DRK PMT	Dark PMT	mV	The PMT output reading recorded the last time the UV source lamp shutter was closed.
DRK LMP	Dark UV Source Lamp	mV	The UV reference detector output reading recorded the last time the UV source lamp shutter was closed.
SO2 SLOPE[1]	SO_2 measurement Slope	-	The sensitivity of the instrument as calculated during the last calibration activity. The slope parameter is used to set the span calibration point of the analyzer.
SO2 OFFS[1]	SO_2 measurement Offset	mV	The overall offset of the instrument as calculated during the last calibration activity. The offset parameter is used to set the zero point of the analyzer response.
H2S SLOPE[1]	H_2S measurement Slope	-	The sensitivity of the instrument as calculated during the last calibration activity. The slope parameter is used to set the span calibration point of the analyzer.
H2S OFFS[1]	H_2S measurement Offset	mV	The overall offset of the instrument as calculated during the last calibration activity. The offset parameter is used to set the zero point of the analyzer response.
HVPS	- -	V	The PMT high voltage power supply.
RCELL TEMP	Sample Chamber Temp	°C	The current temperature of the sample chamber.
BOX TEMP	Box Temperature	°C	The ambient temperature of the inside of the analyzer case.
PMT TEMP	Pmt Temperature	°C	The current temperature of the PMT.
IZS TEMP[1]	IZS Temperature[1]	°C	The current temperature of the internal zero/span option. Only appears when IZS option is enabled
CONV	$H_2S \rightarrow SO_2$	°C	The current temperature of the catalytic converter that changes the

TEMP	Converter Temperature		H_2S present in the sample gas into SO_2.
TEST[2]	Test Signal[2]	mV	Signal of a user-defined test function on output channel A4.
TIME	Clock Time	hh:mm:ss	The current day time for DAS records and calibration events.
[1]Shown as they appear when analyzer is in H_2S mode. In SO_2 mode appear as **SO2 STB**, **SO2 OFFS** & **SO2 SLOPE**. In multigas mode, both versions appear.			

To view the TEST Functions press the following touchscreen control button sequence:

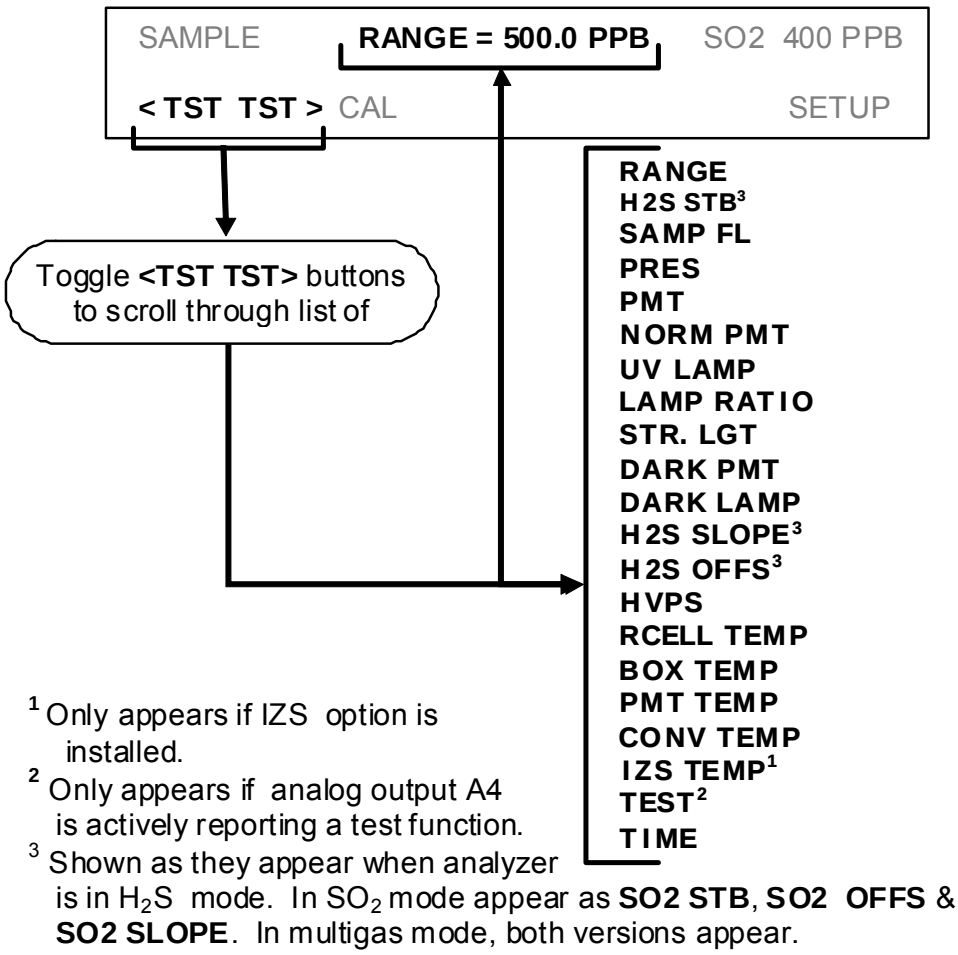

Figure 4-1. Viewing T101 TEST Functions

NOTE

A value of "XXXX" displayed for any of the TEST functions indicates an out-of-range reading or the analyzer's inability to calculate it.

All pressure measurements are represented in terms of absolute pressure. Absolute, atmospheric pressure is 29.92 in-Hg-A at sea level. It decreases about 1 in-Hg per 300 m gain in altitude. A variety of factors such as air conditioning and passing storms can cause changes in the absolute atmospheric pressure.

4.2.2. WARNING MESSAGES

The most common instrument failures will be reported as a warning on the analyzer's front panel and through the COM ports. Section 9.1.1 explains how to use these messages to troubleshoot problems. Table 4-3 lists the warning messages.

Table 4-3. List of Warning Messages

MESSAGE	MEANING
ANALOG CAL WARNING	The instrument's A/D circuitry or one of its analog outputs is not calibrated.
BOX TEMP WARNING	The temperature inside the T101 chassis is outside the specified limits.
CANNOT DYN SPAN	Remote span calibration failed while the dynamic span feature was set to turned on
CANNOT DYN ZERO	Remote zero calibration failed while the dynamic zero feature was set to turned on
CONFIG INITIALIZED	Configuration was reset to factory defaults or was erased.
CONV TEMP WARNING	The temperature of the $H_2S \rightarrow SO_2$ catalytic converter is outside its optimal operating range.
DARK CAL WARNING	Dark offset above limit specified indicating that too much stray light is present in the sample chamber.
DATA INITIALIZED	DAS data storage was erased.
HVPS WARNING	High voltage power supply for the PMT is outside of specified limits.
IZS TEMP WARNING	On units with IZS options installed: The permeation tube temperature is outside of specified limits.
PMT DET WARNING	PMT detector output outside of operational limits.
PMT TEMP WARNING	PMT temperature is outside of specified limits.
RCELL TEMP WARNING	Sample chamber temperature is outside of specified limits.
REAR BOARD NOT DET	The CPU is unable to communicate with the motherboard.
RELAY BOARD WARN	The firmware is unable to communicate with the relay board.
SAMPLE FLOW WARN	The flow rate of the sample gas is outside the specified limits.
SAMPLE PRESS WARN	Sample pressure outside of operational parameters.
SYSTEM RESET	The computer was rebooted.
UV LAMP WARNING	The UV lamp intensity measured by the reference detector reading too low or too high

To view and clear warning messages:

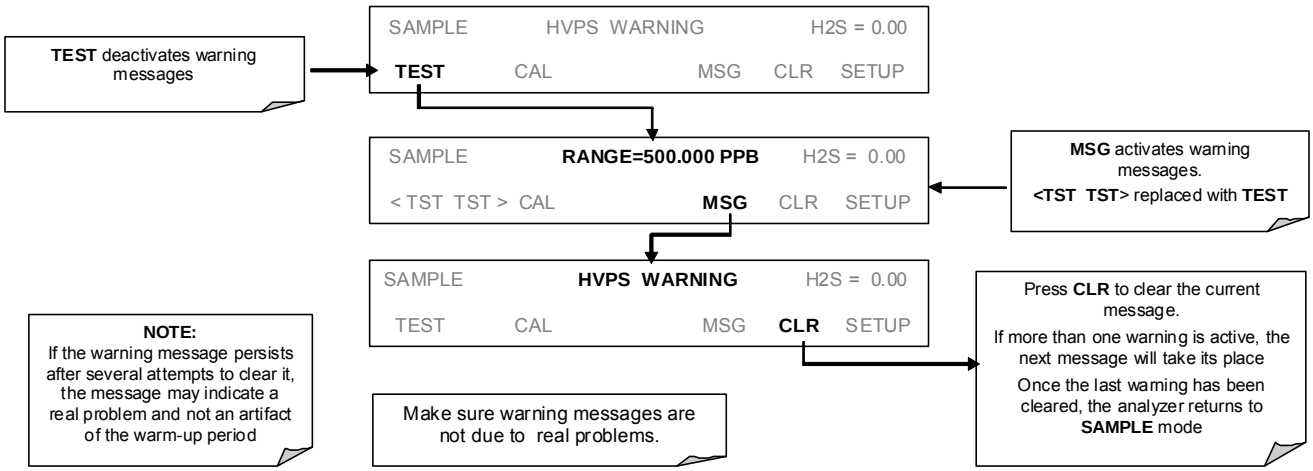

Figure 4-2. Viewing and Clearing T101 WARNING Messages

4.3. CALIBRATION MODE

Pressing the CAL button switches the T101 into multi-point calibration mode. In this mode, the user can calibrate the instrument or check the instrument's calibration with the use of calibrated zero or span gases.

If the instrument includes either the zero/span valve option or IZS option, the display will also include **CALZ** and **CALS** buttons. Pressing either of these buttons also puts the instrument into multipoint calibration mode.

- The **CALZ** button is used to initiate a calibration of the zero point.
- The **CALS** button is used to calibrate the span point of the analyzer. It is recommended that this span calibration is performed at 90% of full scale of the analyzer's currently selected reporting range.

Because of their critical importance and complexity, calibration operations are described in Section 6 of this manual.

4.3.1. CALIBRATION PASSWORD SECURITY

The T101 calibration functions may be password protected for to prevent inadvertent adjustments. When the calibration password has been enabled using the **PASS** menu item found under the Setup Menu (Section 4.4.5), the system will prompt the user for a password anytime **CAL**, **CALZ**, **CALS** activated.

The default status of the calibration password is **OFF**. To enable the calibration password press:

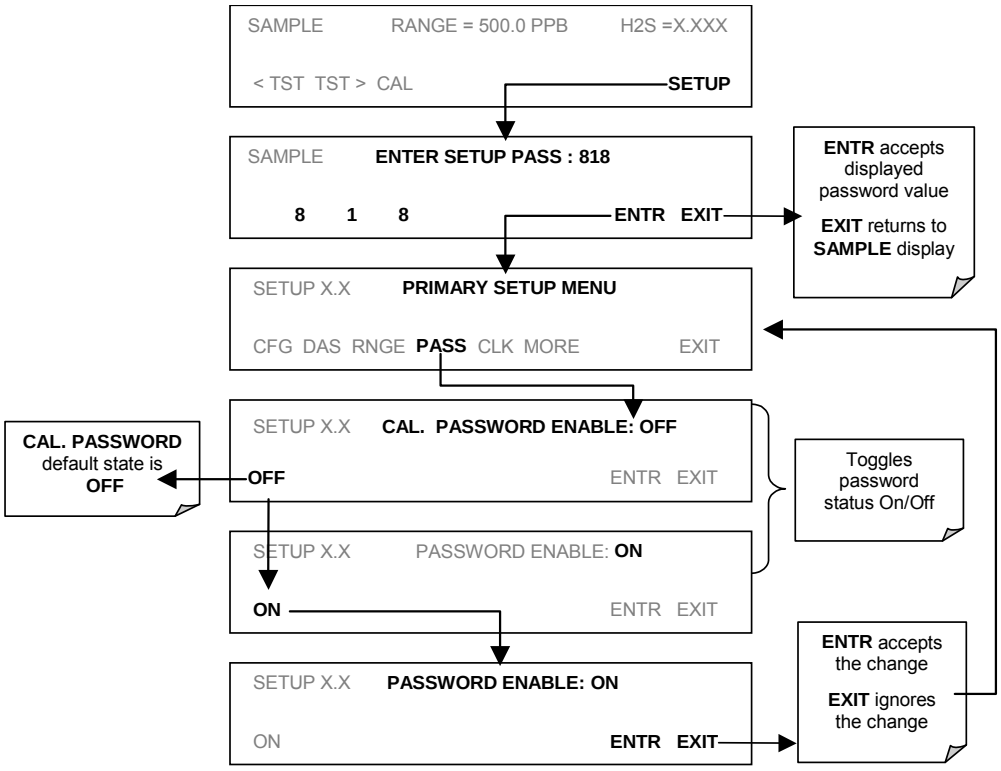

If the calibration password (**101**) is enabled, the following menu button sequence will be required to enter one of the calibration modes:

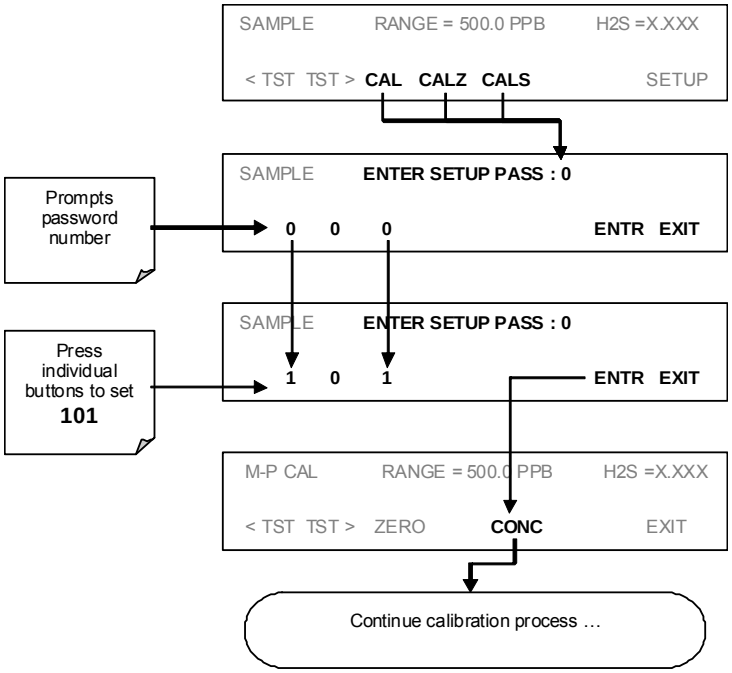

4.4. SETUP MODE

The **SETUP** mode allows you to configure the analyzer's hardware and software features, perform diagnostic procedures, gather information on the instrument's performance and configure or access data from the internal data acquisition system (DAS). For a visual representation of the software menu trees, refer to Appendix A.

Pressing the **SETUP** button activates a prompt for a security password. The default password is **818**. Press ENTR to proceed.

However, there is the option to enable a higher level of security; described in Section 4.4.5.

Other password levels exist allowing access to special diagnostic tools and variables used only for specific and rarely needed troubleshooting and adjustment procedures. They may be made available as needed by Teledyne API's Technical Support department.

The following two tables decribe the menus under Setup mode:

Table 4-4. Primary Setup Mode Features and Functions

MODE OR FEATURE	TOUCHSCREEN BUTTON	DESCRIPTION	MANUAL SECTION
Analyzer Configuration	**CFG**	Lists key hardware and software configuration information	4.4.1
Auto Cal Feature	**ACAL**	Used to set up and operate the AutoCal feature. Only appears if the analyzer has one of the internal valve options installed	6.9
Internal Data Acquisition system (DAS)	**DAS**	Used to set up the DAS system and view recorded data	4.8
Analog Output Reporting Range Configuration	**RNGE**	Used to configure the output signals generated by the instrument's Analog outputs.	4.4.4
Calibration Password Security	**PASS**	Turns the calibration password feature ON/OFF	4.4.5
Internal Clock Configuration	**CLK**	Used to Set or adjust the instrument's internal clock	4.4.6
Advanced **SETUP** features	**MORE**	This button accesses the instrument's secondary setup menu	(Table 4-5)

Table 4-5. Secondary Setup Mode Features and Functions

MODE OR FEATURE	TOUCHSCREEN BUTTON	DESCRIPTION	MANUAL SECTION
External Communication Channel Configuration	**COMM**	Used to set up and operate the analyzer's various external I/O channels including RS-232; RS 485, modem communication and/or Ethernet access.	4.7 & 5
System Status Variables	**VARS**	Used to view various variables related to the instrument's current operational status	4.5
System Diagnostic Features	**DIAG**	Used to access a variety of functions that are used to configure, test or diagnose problems with a variety of the analyzer's basic systems	4.6

NOTE

If the analyzer beeps when you press the EXIT button, it means that you've made a change / entered a new value for a parameter but have not caused it to be accepted by pressing ENTR first.

4.4.1. SETUP – CFG: VIEWING THE ANALYZER'S CONFIGURATION INFORMATION

Pressing the CFG button displays the instrument configuration information. This display lists the analyzer model, serial number, firmware revision, software library revision, CPU type and other information. Use this information to identify the software and hardware when contacting Technical Support. Special instrument or software features or installed options may also be listed here.

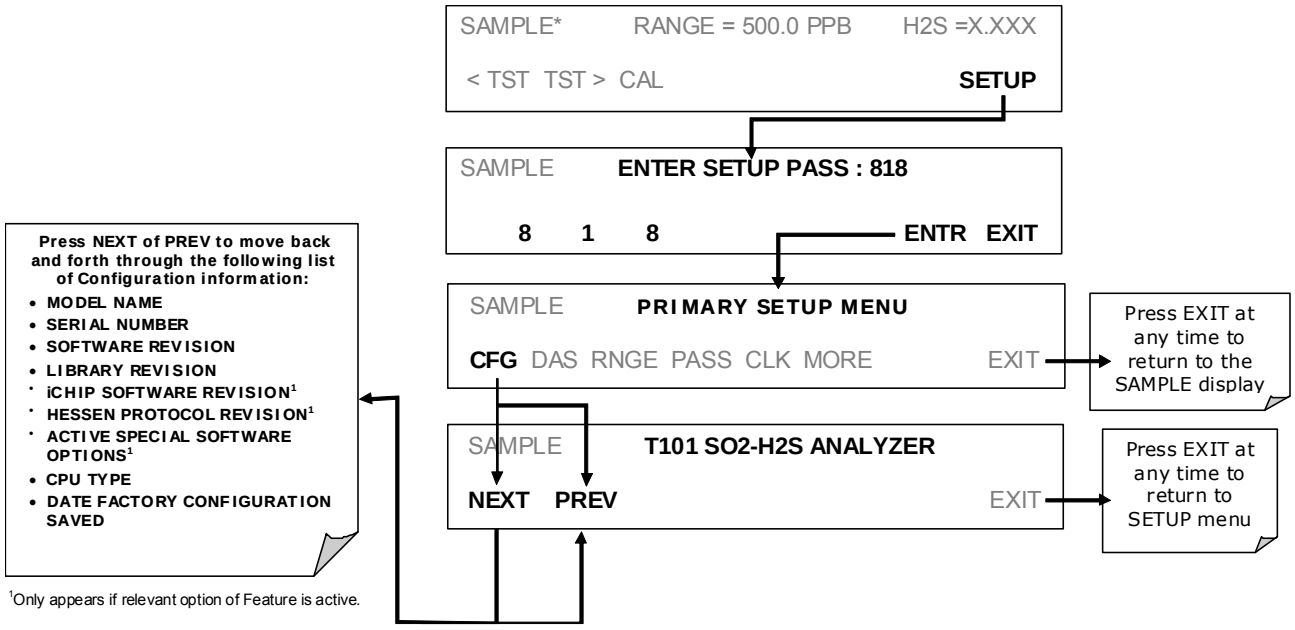

4.4.2. SETUP – ACAL: AUTO CALIBRATION

Used to set up and operate the internal valve options if installed. Section 6 provides details.

4.4.3. SETUP – DAS: DATA ACQUISITION

Used to set up the data acquisition system and record data.

4.4.4. SETUP – RANGE: ANALOG OUTPUT REPORTING RANGE CONFIGURATION

4.4.4.1. Available Analog Output Signals

The analyzer has three active analog output signals, accessible through a connector on the rear panel.

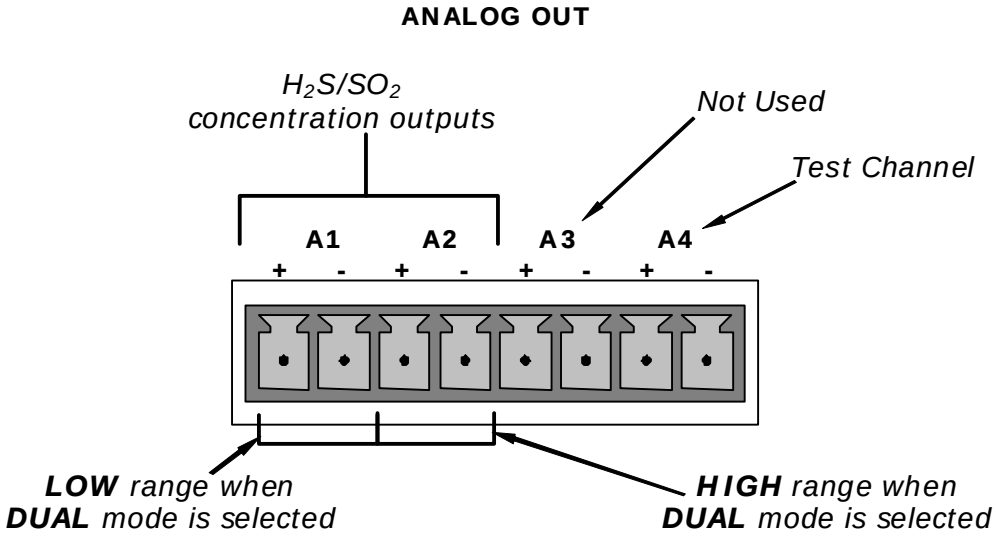

Figure 4-3. Analog Output Connectors Defined

All three outputs can be configured either at the factory or by the user for full scale outputs of 0.1 VDC, 1VDC, 5VDC or 10VDC. Additionally **A1** and **A2** may be equipped with optional 0-20 mADC current loop drivers and configured for any current output within that range (e.g. 0-20, 2-20, 4-20, etc.). The user may also adjust the signal level and scaling of the actual output voltage or current to match the input requirements of the recorder or data logger (See Sections 4.6.3.3 and 4.6.3.5).

In its basic configuration, the **A1** and **A2** channels of the T101 output a signal that is proportional to the H_2S concentration of the sample gas. Several operating modes are available which allow them to be slaved together (**SNGL** Mode, see Section 4.4.4.4 or

AUTO mode, see section 4.4.4.6) or operate independently (**IND** mode, see Section 4.4.4.5) The user may also select between a variety of reporting range spans as well:

EXAMPLE:

A1 OUTPUT: Output Signal = 0-5 VDC representing 0-1000 ppm concentration values

A2 OUTPUT: Output Signal = 0 – 10 VDC representing 0-500 ppm concentration values.

NOTE

On analyzers with the SO_2-H_2S multigas measurement option installed the outputs of A1 and A2 correspond to:

Output Channel		SO_2 Mode		$SO_2 - H_2S$ Mode		H_2S Mode
A1	←→	SO_2	←→	SO_2	←→	H_2S
A2	←→	SO_2	←→	H_2S	←→	H_2S

As the instrument switches from H_2S mode to SO_2 mode and back, only the reporting range and analog output associated with the gas currently being measured will be active. The reporting range and analog output for the gas no being measured will continue to report the last valid reading.

The output, labeled **A4** is special. It can be set by the user (see Section 4.6.9) to output many of the parameters accessible through the **<TST TST>** buttons of the units Sample Display.

Output **A3** is not available on the Model T101 Analyzer.

4.4.4.2. Physical Range versus Analog Output Reporting Ranges

The T101 UV Fluorescence H_2S Analyzer has two hardware physical ranges that cover H_2S concentrations between 0 and 20,000 ppb. The low range is 0 to 2,000 ppb, while the high range is 0 to 20,000 ppb. The proper physical range is determined by the software to include the maximum measurement concentration selected by the user. Once properly calibrated, the analyzer's front panel will accurately report concentrations along the entire span of its 0 and 20,000 ppb physical range.

Because, most applications use only a small part of the analyzer's two physical ranges, the width of the Model T101's physical range can create data resolution problems for most analog recording devices. For example, in an application where the expected concentration of SO_x is typically less than 500 ppb, the full scale of expected values is only 0.25% of the instrument's 20,000 ppb physical range. Unmodified, the corresponding output signal would also be recorded across only 0.25% of the range of the recording device.

The T101 solves this problem by allowing the user to select a scaled reporting range for the analog outputs that only includes that portion of the physical range relevant to the specific application. Only the reporting range of the analog outputs is scaled, the physical range of the analyzer and the readings displayed on the front panel remain unaltered.

4.4.4.3. Reporting Range Modes

The T101 provides three analog output range modes to choose from. The actual signals output on the two analog signal channels depends on whether or not the analyzer includes a SO_2/H_2S multigas measurement option and if so which measurement mode is selected.

- Single range (SNGL) mode: This mode sets a single maximum range for the analog output. If single range is selected (see Section 4.4.4.4) both outputs are slaved together and will represent the same measurement span (e.g. 0-50 ppm), however their electronic signal levels may be configured differently (e.g. 0-10 VDC vs. 0-.1 VDC – see Section 4.6.3.1). In SO_2/H_2S multigas measurement mode, although the two inputs are measuring different gases, the two measurements scales are identical.

Independent range (**IND**) mode: This mode allows the **A1** and **A2** outputs to be configured with different measurement spans (see Section 4.4.4.5) as well as separate electronic signal levels (see Section 4.6.3.1) and, if the instrument is equipped with the SO_2/H_2S multigas measurement option, different gas measurements.

- Auto range (**AUTO**) mode: As in single range mode, both outputs are slaved together and will represent the same measurement span; however this mode gives the analyzer the ability switch to automatically switch between the two user selected ranges (High and Low). This switching occurs dynamically as the concentration value fluctuates.

High/low range status is output via the External Digital I/O Status Bits (see Section 5.1.1.1).

To select the Analog Output Range Type press:

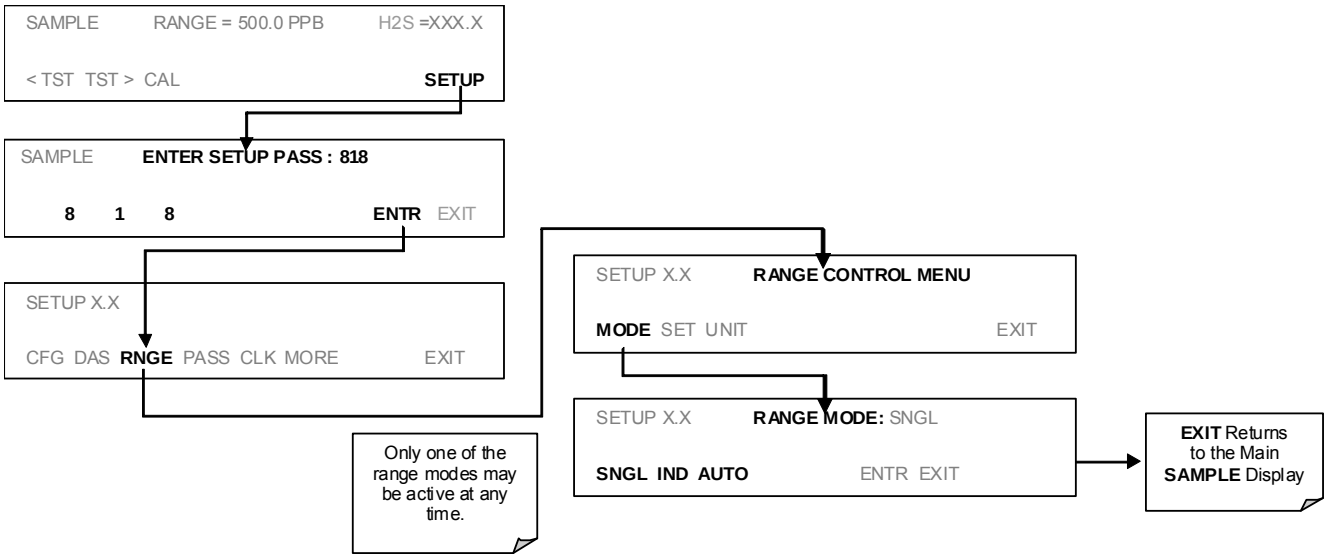

4.4.4.4. Single Range Mode (SNGL)

The default range mode for the analyzer is single range, in which all analog concentration outputs are set to the same reporting range. This reporting range can be set to any value between 5.0 ppb and 20 000 ppb.

While the two outputs always have the same reporting range, the span and scaling of their electronic signals may also be configured for different differently (e.g., **A1** = 0-10 V; **A2** = 0-0.1 V).

To select **SNGLE** range mode and to set the upper limit of the range, press:

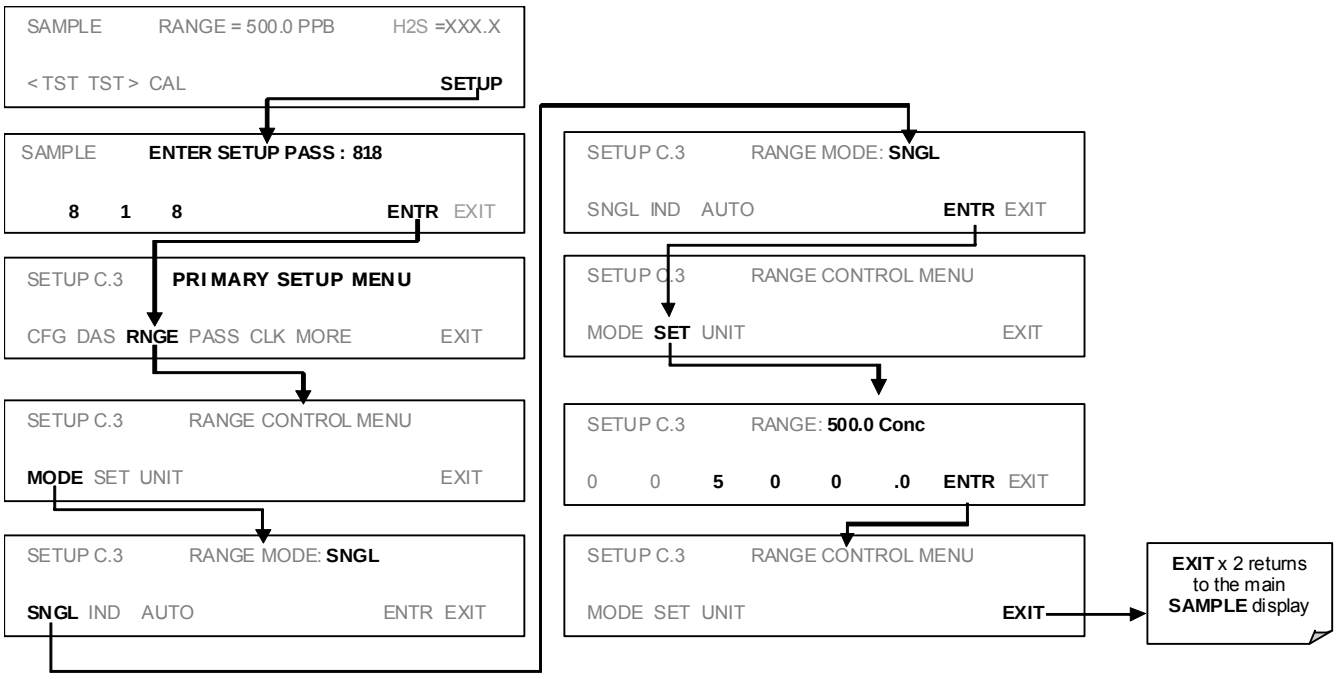

NOTE

On analyzers with the multigas option activated (see Sections 4.5.1 and 6.8) the concentration value will switch back and forth between from "H2S=XXX.X" to "SO2=XXX.X" depending on which gas is currently being measured.

4.4.4.5. Independent Range Mode (IND)

Selecting independent range mode allows the **A1** and **A2** outputs to be configured with different measurement ranges. The analyzer software calls these two ranges **LOW** and **HIGH**. The **LOW** range setting corresponds with the analog output labeled **A1** on the rear panel of the instrument. The **HIGH** range setting corresponds with the **A2** output. While the software names these two ranges **LOW** and **HIGH**, they do not have to be configured that way.

Also, in this mode the **RANGE** Test function displayed on the front panel during **SAMPLE** mode will be replaced by two separate functions, **RANGE1** & **RANGE2**.

- **LOW** range = **RANGE1** = Range value for output **A1** = 0-1500 ppb H_2S.
- **HIGH** range = **RANGE2** = Range value for output **A2** = 0-500 ppb H_2S.

For T101's configured to measure both SO_2 and H_2S in multigas measurement mode:

- **LOW** range = **RANGE1** = Range value for output **A1**= 0-1500 ppm SO_2.
- **HIGH** range = **RANGE2** = Range value for output **A2** =0-1000 ppm H_2S.

To select the independent reporting range mode and set the upper measurement limits for the two outputs, press:

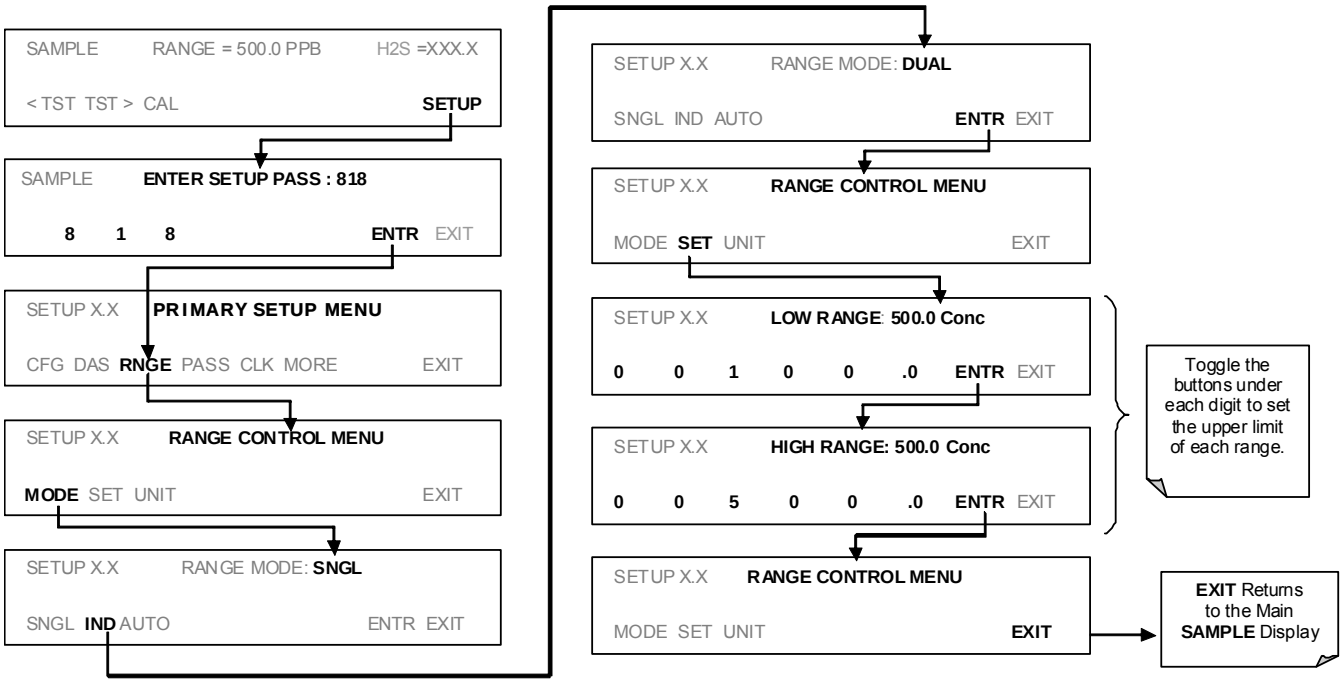

NOTE

In INDEPENDENT range mode the two reporting ranges have separate slopes and offsets for computing concentration and MUST be independently calibrated.

NOTE

On analyzers with the multigas option activated (see Sections 4.5.1 and 6.8) the titles displayed on the instrument's front panel during the previous operation appear as:

LOW range appears as SO2 RANGE
high range appears as H2S RANGE

As the instrument switches from H_2S mode to SO_2 mode and back, only the reporting range and analog output associated with the gas currently being measured will be active. The reporting range and analog output for the gas no being measured will continue to report the last valid reading.

4.4.4.6. Auto Range Mode (AUTO)

In AUTO range mode, the analyzer automatically switches the reporting range between two user-defined ranges (low and high). The unit will switch from low range to high range when the H_2S concentration exceeds 98% of the low range span. The unit will return from high range back to low range once both the H_2S concentration falls below 75% of the low range span.

When set up to measure a single gas (H_2S or SO_2), in **AUTO** Range mode the instrument reports the same data in the same range on both the **A1** and **A2** outputs and automatically switches both outputs between ranges as described above.

To select auto range mode and set the upper span limits for the high and low ranges, press the following menu button sequence.

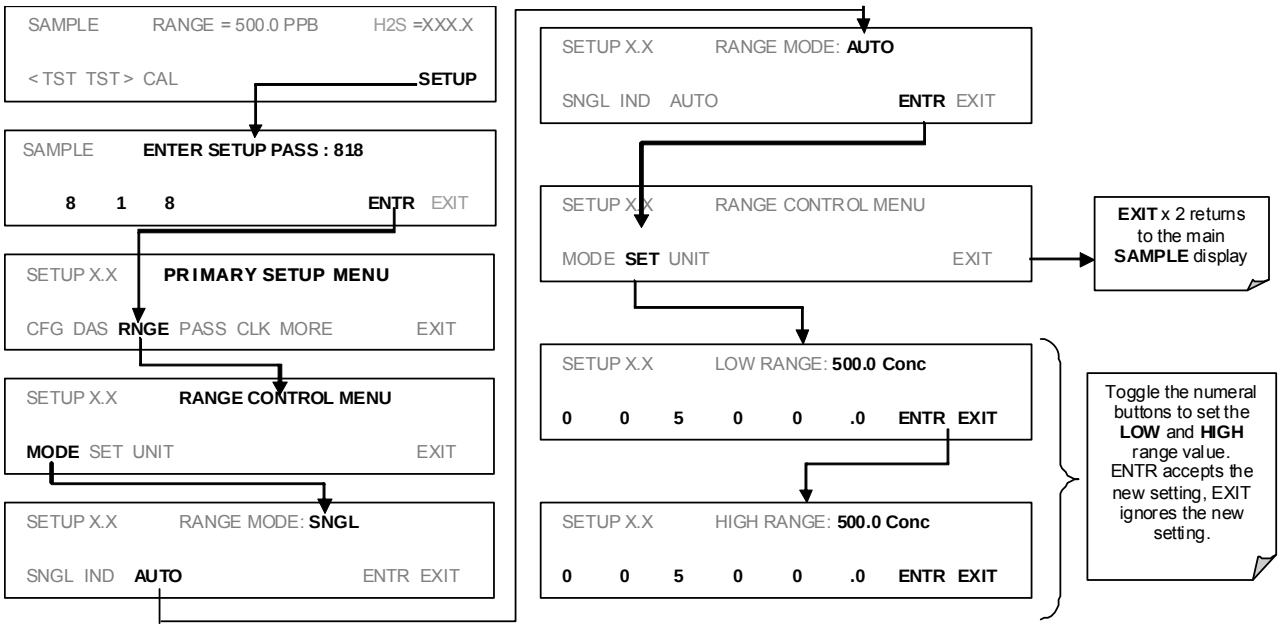

NOTE

On analyzers with the multigas option activated (see Section s 4.5.1 and 6.8) the concentration value will switch back and forth between from "H2S=XXX.X" to "SO2=XXX.X" depending on which gas is currently being measured.

Also, The analyzer will switch between the HIGH and LOW analog reporting ranges whenever the concentration level of the gas being currently measured fulfills the trigger criteria listed at the beginning of this section.

4.4.4.7. Range Units

The T101 can display concentrations in parts per billion (10^9 mols per mol, **PPB**), parts per million (10^6 mols per mol, **PPM**), micrograms per cubic meter ($\mu g/m^3$, **UG**) or milligrams per cubic meter (mg/m^3, **MG**). Changing units affects all of the display, analog outputs, COM port and DAS values for all reporting ranges regardless of the analyzer's range mode.

To change the concentration units:

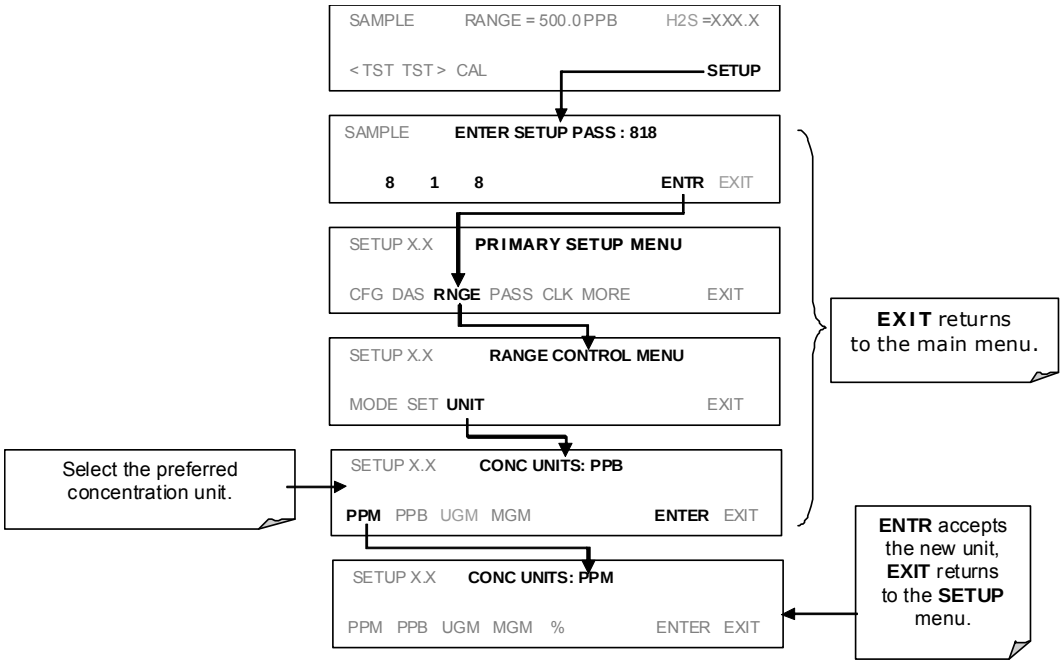

NOTE

Concentrations displayed in mg/m^3 and $\mu g/m^3$ use standard temperature and pressure (STP). The conversion factors from volumetric to mass units used in the T101 are:

SO_2: ppb x 2.86 = $\mu g/m^3$; ppm x 2.86 = mg/m^3

H_2S: ppb x 1.52 = $\mu g/m^3$; ppm x 1.52 = mg/m^3

4.4.4.8. Dilution Ratio

The dilution ratio is a software option that allows the user to compensate for any dilution of the sample gas before it enters the sample inlet.

1. Select reporting range units: Follow the procedure in Section 4.4.4.7.
2. Select the range: Use the procedures in Section 4.4.4.3 – 4.4.4.6.

   Make sure:
   that the **SPAN** value entered is the maximum expected concentration of the undiluted calibration gas, and

   that the span gas is either supplied through the same dilution inlet system as the sample gas or has an appropriately lower actual concentration.

   For example, with a dilution set to 100, a 1 ppm gas can be used to calibrate a 100 ppm sample gas if the span gas is not routed through the dilution system. On the other hand, if a 100 ppm span gas is used, it needs to pass through the same dilution steps as the sample gas.
3. Set the dilution factor as a gain (e.g., a value of 20 means 20 parts diluent and 1 part of sample gas):

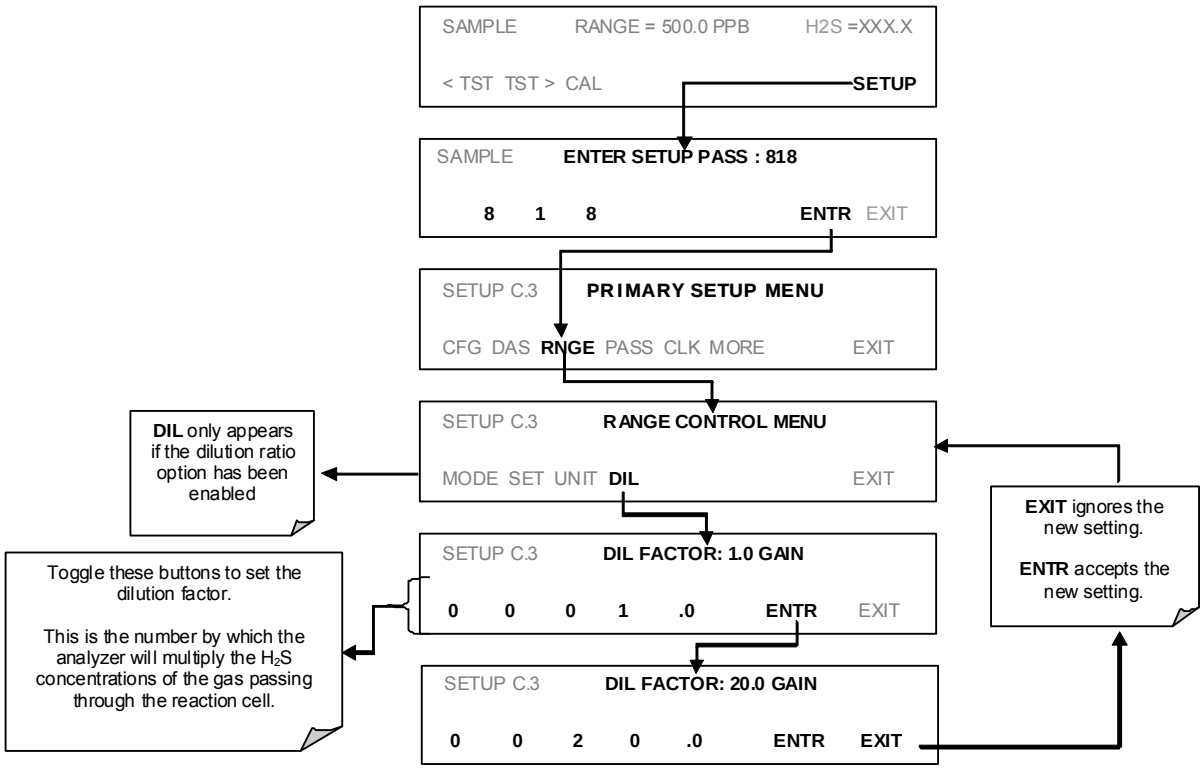

The analyzer multiplies the measured gas concentrations with this dilution factor and displays the result.

NOTE
Once the above settings have been entered, the instrument needs to be recalibrated using one of the methods discussed in Section 6.

4.4.5. SETUP – PASS: PASSWORD PROTECTION

The menu system provides password protection of the calibration and setup functions to prevent unauthorized adjustments. When the passwords have been enabled in the **PASS** menu item, the system will prompt the user for a password anytime a password-protected function (e.g., SETUP) is selected. This allows normal operation of the instrument, but requires the password (101) to access to the menus under SETUP. When PASSWORD is disabled (SETUP>OFF), any operator can enter the Primary Setup (SETUP) and Secondary Setup (SETUP>MORE) menus. Whether PASSWORD is enabled or disabled, a password (default 818) is required to enter the VARS or DIAG menus in the SETUP>MORE menu.

Table 4-6. Password Levels

PASSWORD	LEVEL	MENU ACCESS ALLOWED
Null (000)	Operation	All functions of the main menu (top level, or Primary, menu)
101	Configuration/Maintenance	Access to Primary and Secondary SETUP Menus when PASSWORD is enabled
818	Configuration/Maintenance	Access to Secondary SETUP Submenus **VARS** and **DIAG** whether PASSWORD is enabled or disabled.

To enable or disable passwords, press:

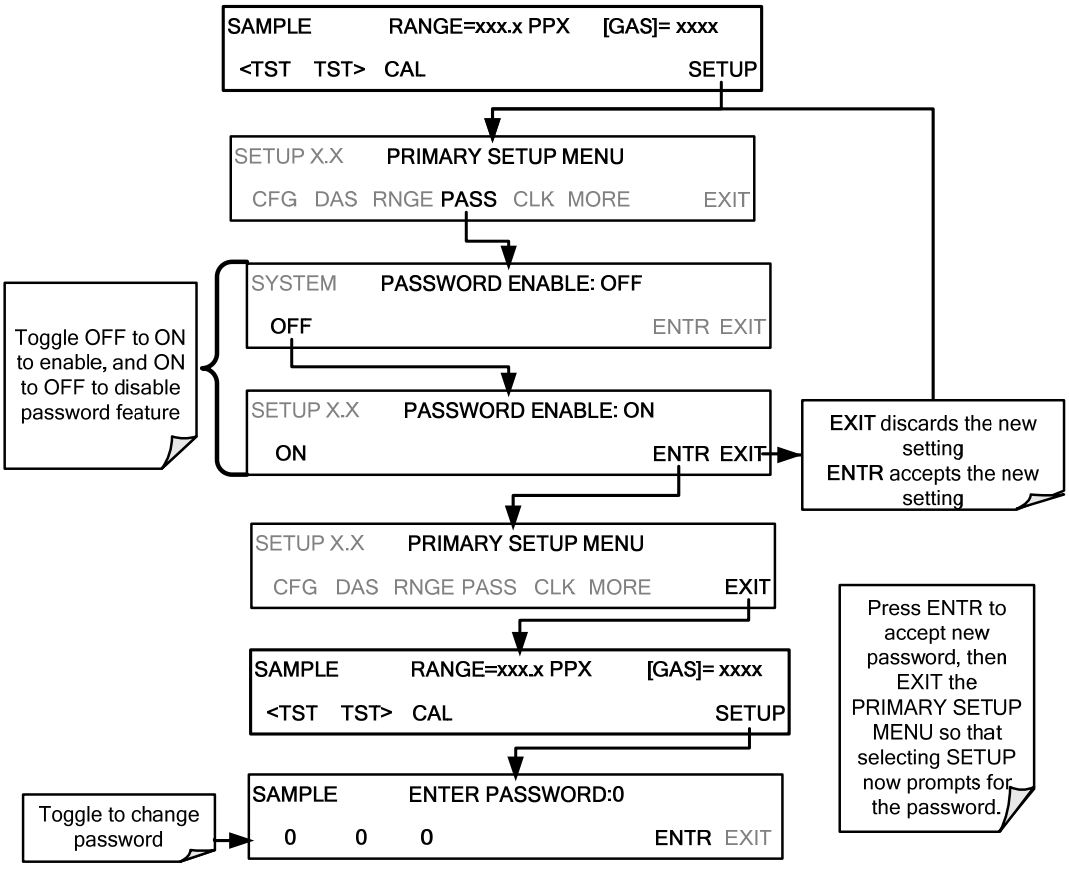

4.4.6. SETUP – CLK: SETTING THE INTERNAL TIME-OF-DAY CLOCK

The T101 has a built-in clock for the AutoCal timer, Time **TEST** function, and time stamps on COM port messages and DAS data entries. To set the time-of-day, press:

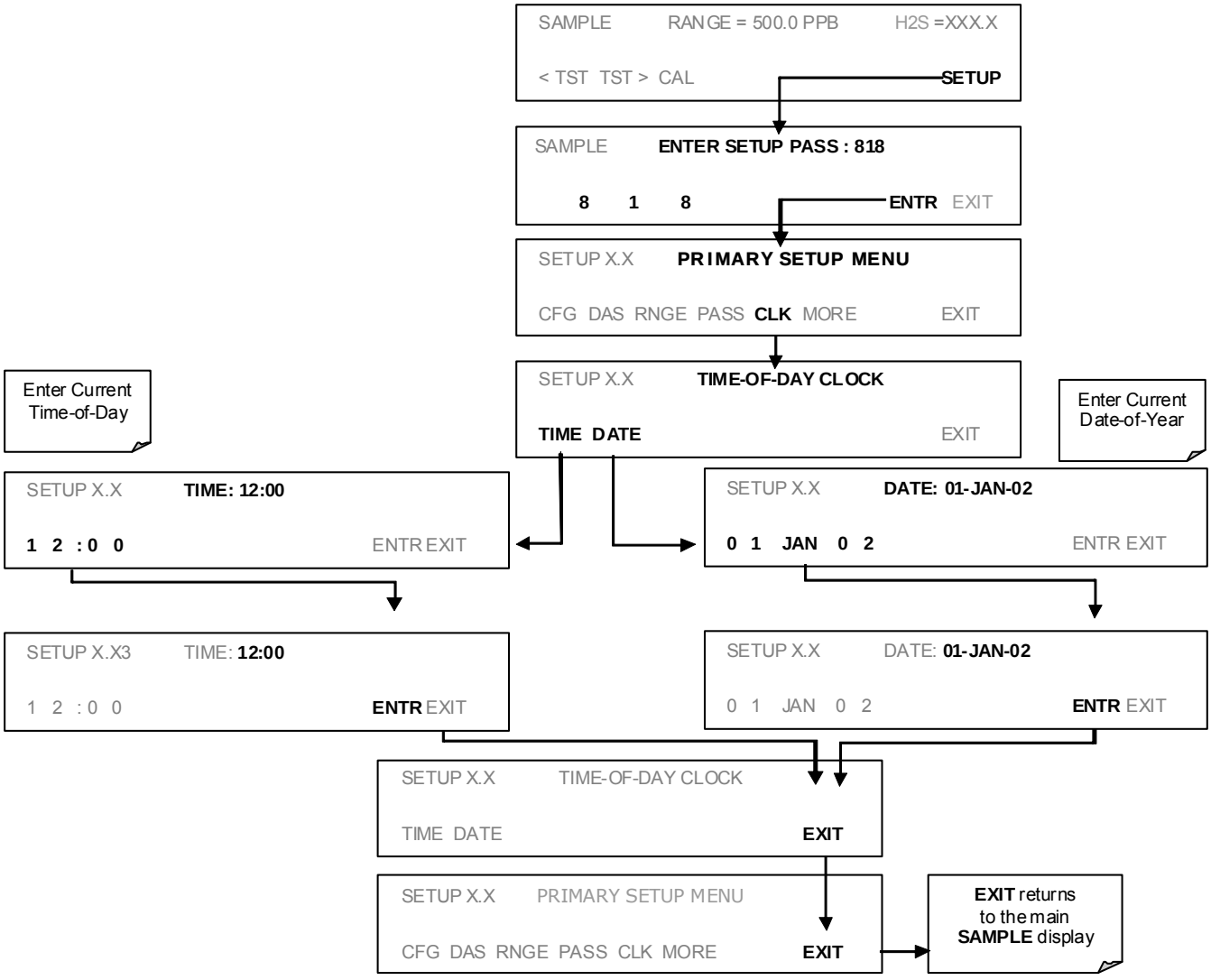

In order to compensate for CPU clocks which run fast or slow, there is a variable to speed up or slow down the clock by a fixed amount every day. To change this variable, press:

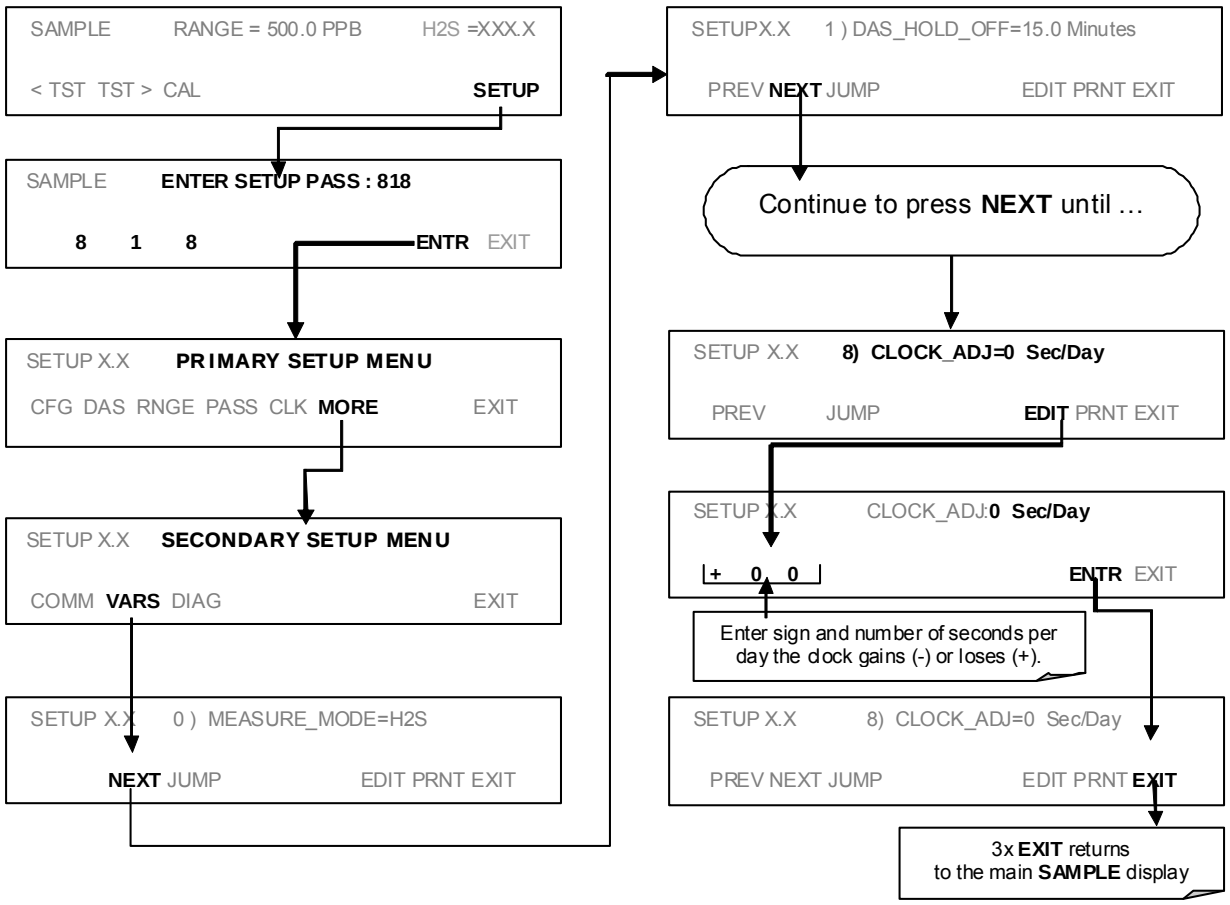

4.5. SETUP – VARS: USING THE INTERNAL VARIABLES

The T101 has several-user adjustable software variables, which define certain operational parameters. Usually, these variables are automatically set by the instrument's firmware, but can be manually re-defined using the VARS menu. Table Table 4-7 lists variables that are available within the 818 password protected level.

Table 4-7. Variable Names (VARS)

NO.	VARIABLE	DESCRIPTION	ALLOWED VALUES
0	MEASURE_MODE	Selects the gas measurement mode in which the instrument is to operate. SO_2 only, H_2S only or dual gas measurement of SO_2 and H_2S simultaneously. Dual gas mode requires that a special switching option be installed (see Sections 4.5.1 and 10.3.2).	SO_2; $SO_2 – H_2S$; H_2S
1	CAL_GAS	Used to select the calibration gas (SO_2 or H_2S) or to select default behavior (DEF) where valve position and slope-offset are same.	DEF, SO2 , H2S
2	DAS_HOLD_OFF	Changes the internal data acquisition system (DAS) hold-off time, which is the duration when data are not stored in the DAS because the software considers the data to be questionable. That is the case during warm-up or just after the instrument returns from one of its calibration modes to SAMPLE mode. DAS_HOLD_OFF can be disabled entirely in each DAS channel.	Can be between 0.5 and 20 minutes Default=15 min.
3	TPC_ENABLE	Enables or disables the temperature and pressure compensation (TPC) feature.	ON/OFF
4	RCELL_SET	Sets the sample chamber temperature. Increasing or decreasing this temperature will increase or decrease the rate at which SO_2* decays into SO_2. (Section 10.1.2). Do not adjust this setting unless under the direction of Teledyne API's Technical Support personnel.	30º C - 70º C Default= 50º C
5	IZS_SET	Sets the IZS option temperature. Increasing or decreasing this temperature will increase or decrease the permeation rate of the IZS source.	30º C - 70º C Default= 50º C
6	DYN_ZERO	Dynamic zero automatically adjusts offset and slope of the H_2S response when performing a zero point calibration during an AutoCal (Section 6).	ON/OFF
7	DYN_SPAN	Dynamic span automatically adjusts slope and slope of the H_2S response when performing a zero point calibration during an AutoCal (Section 6). Note that the DYN_ZERO and DYN_SPAN features are not allowed for applications requiring EPA equivalency.	ON/OFF
8	CONC_PRECISION	Allows the user to set the number of significant digits to the right of the decimal point display of concentration and stability values.	AUTO, 1, 2, 3, 4 Default=AUTO
9	CLOCK_ADJ	Adjusts the speed of the analyzer's clock. Choose the + sign if the clock is too slow, choose the - sign if the clock is too fast.	-60 to +60 s/day
10	SERVICE_CLEAR	Resets the service interval timer.	OFF/ON

NO.	VARIABLE	DESCRIPTION	ALLOWED VALUES
11	**TIME_SINCE_SVC**	Displays time in hours since last service.	0-500000
12	**SVC_INTERVAL**	Sets the interval in hours between service reminders	0-100000

To access and navigate the VARS menu, use the following touchscreen button sequence:

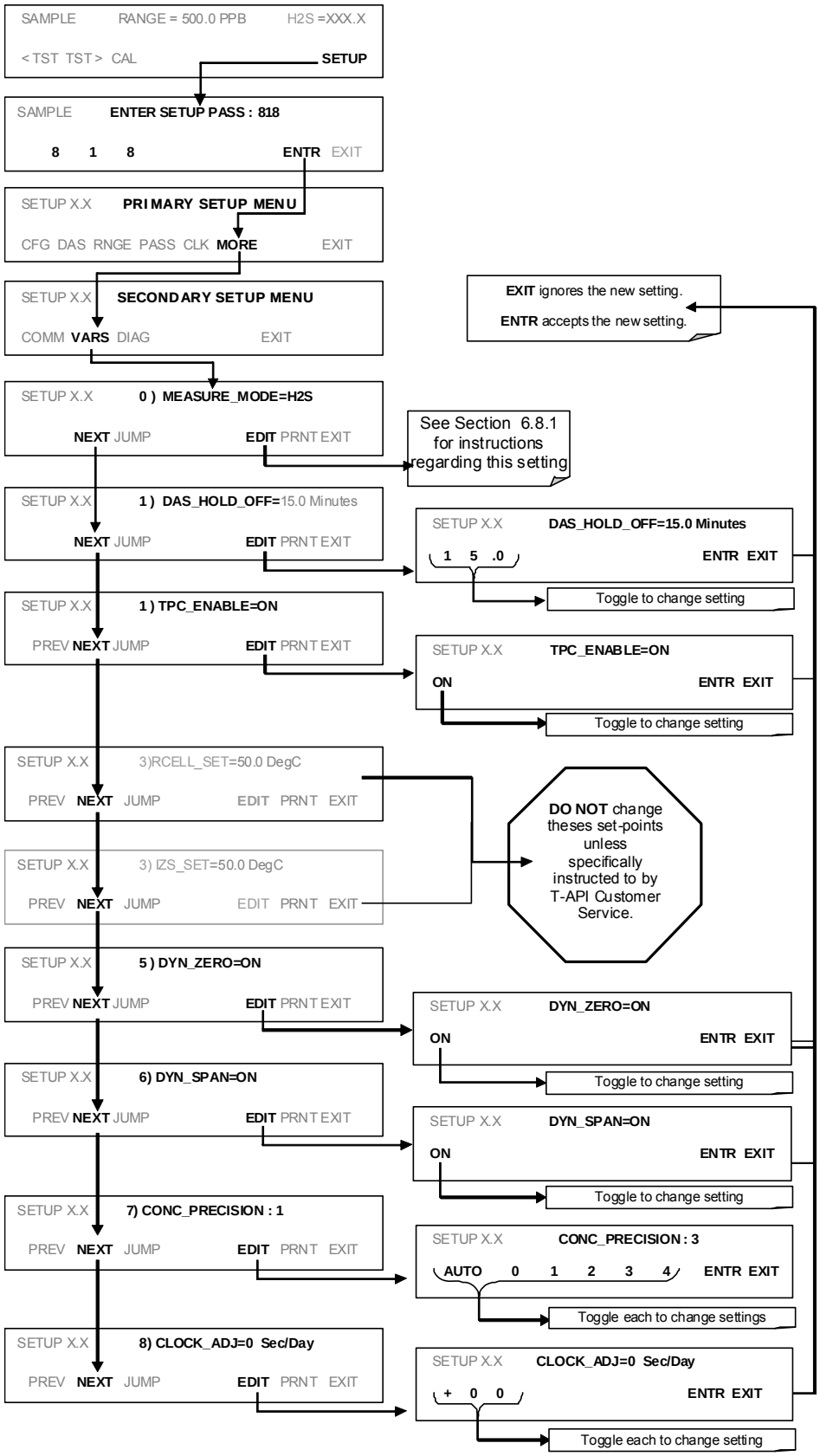

4.5.1. SETTING THE GAS MEASUREMENT MODE

If the switching valves software is activated, the T101 can be set to one of three gas measurement modes:

- **H_2S**
  The sample gas stream is stripped of any ambient SO_2 by a special chemical scrubber, then passed through a catalytic converter that changes the H_2S present into SO_2 which is then measured using the UV Fluorescence method
- **SO_2**
  The sample gas stream bypasses the SO_2 Scrubber and catalytic converter allowing the only ambient SO_2 to be measured.
- **H_2S – SO_2**
  The switching valve alternates the gas stream between the two paths at regular intervals allowing the instrument to measure both gases.

To select one of these three measurement modes (see Section 10.3.2 for additional details), press:

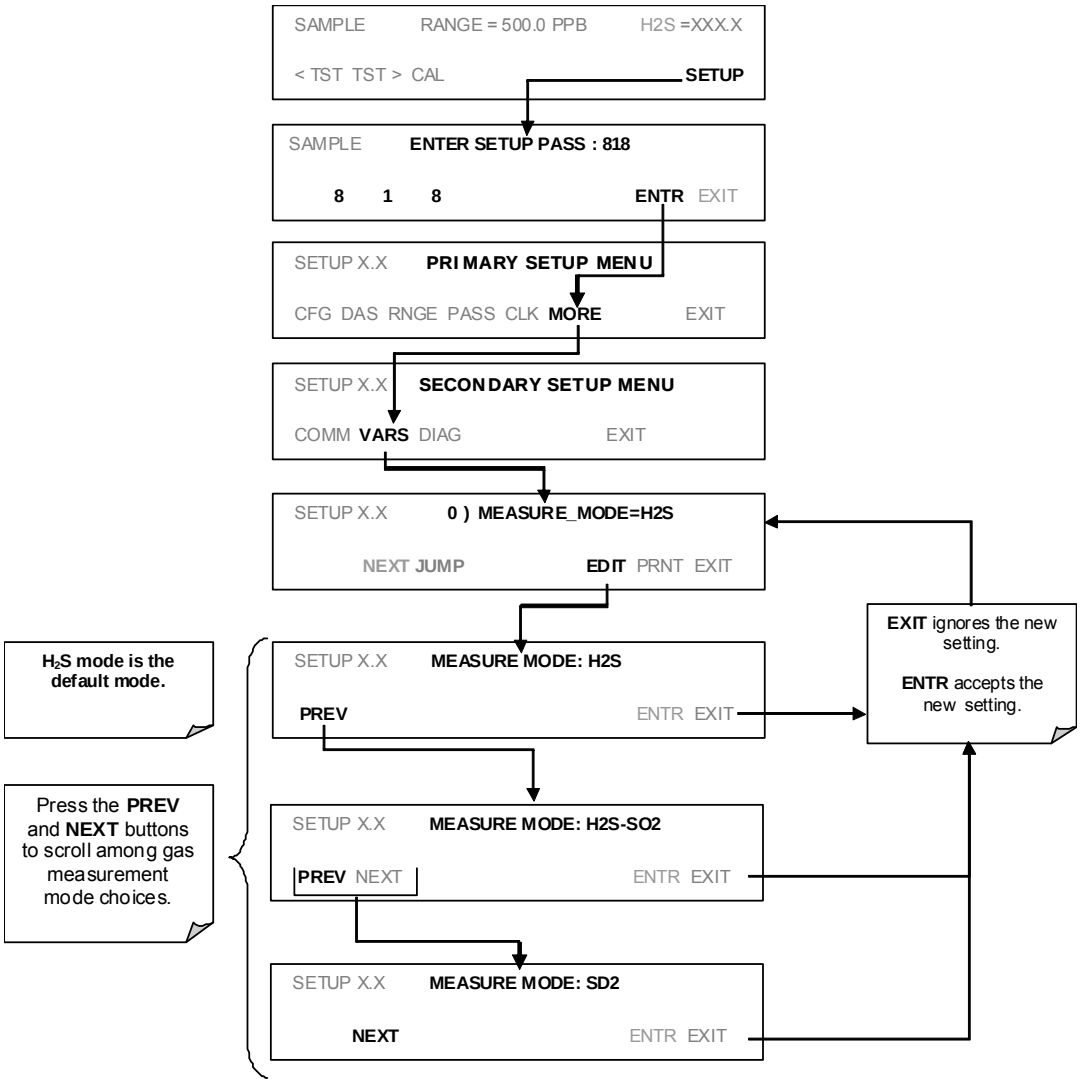

4.6. SETUP – DIAG: USING THE DIAGNOSTICS FUNCTIONS

A series of diagnostic tools is grouped together under the **SETUP→MORE→DIAG** menu. As these parameters are dependent on firmware revision (see Menu Tree A-5 in Appendix A). The individual parameters, however, are explained in more detail in the following section, indicated in Table 4-8. These tools can be used in a variety of troubleshooting and diagnostic procedures and are referred to in many places of the maintenance and trouble-shooting sections.

Table 4-8. T101 Diagnostic (DIAG) Functions

DIAGNOSTIC FUNCTION AND MEANING	FRONT PANEL MODE INDICATOR	SECTION
SIGNAL I/O: Allows observation of all digital and analog signals in the instrument. Allows certain digital signals such as valves and heaters to be toggled ON and OFF.	**DIAG I/O**	4.6.1
ANALOG OUTPUT: When entered, the analyzer performs an analog output step test. This can be used to calibrate a chart recorder or to test the analog output accuracy.	**DIAG AOUT**	4.6.2
ANALOG I/O CONFIGURATION: Analog input/output parameters are available for viewing and configuration.	**DIAG AIO**	4.6.3
OPTIC TEST When activated, the analyzer performs an optic test, which turns on an LED located inside the sensor module near the PMT (Fig. 10-15). This diagnostic tests the response of the PMT without having to supply span gas.	**DIAG OPTIC**	4.6.4
ELECTRICAL TEST: When activated, the analyzer performs an electric test, which generates a current intended to simulate the PMT output to verify the signal handling and conditioning of the PMT preamp board.	**DIAG ELEC**	4.6.5
LAMP CALIBRATION: The analyzer records the current voltage output of the UV source reference detector. This value is used by the CPU to calculate the lamp ration used in determining the H_2S/SO_2 concentration (see 10.2.2)	**DIAG LAMP**	4.6.6
PRESSURE CALIBRATION: The analyzer records the current output of the sample gas pressure sensor. This value is used by the CPU to compensate the H_2S concentration when the TPC feature is enabled.	**DIAG PCAL**	4.6.7
FLOW CALIBRATION: This function is used to calibrate the gas flow output signals of sample gas and ozone supply. These settings are retained when exiting DIAG.	**DIAG FCAL**	4.6.8
TEST CHAN OUTPUT: Configures the A4 analog output channel.	**DIAG TCHN**	4.6.9

To access the **DIAG** functions press the following buttons:

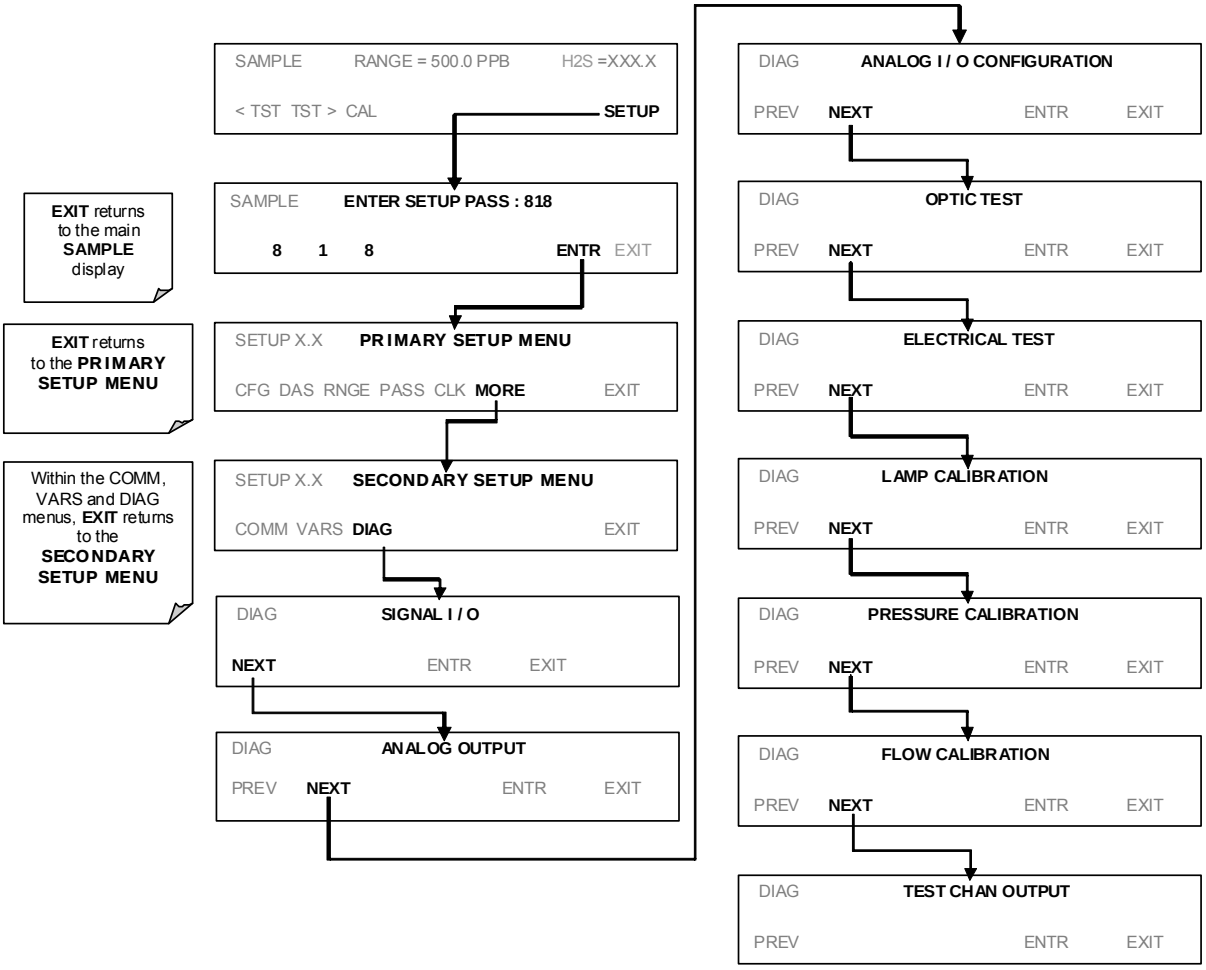

4.6.1. SIGNAL I/O

The signal I/O diagnostic mode allows reviewing and changing the digital and analog input/output functions of the analyzer. See Appendix A for a list of the parameters available under this menu.

NOTE

Any changes of signal I/O settings will remain in effect only until the signal I/O menu is exited. Exceptions are the ozone generator override and the flow sensor calibration, which remain as entered when exiting.

To enter the signal I/O test mode, press:

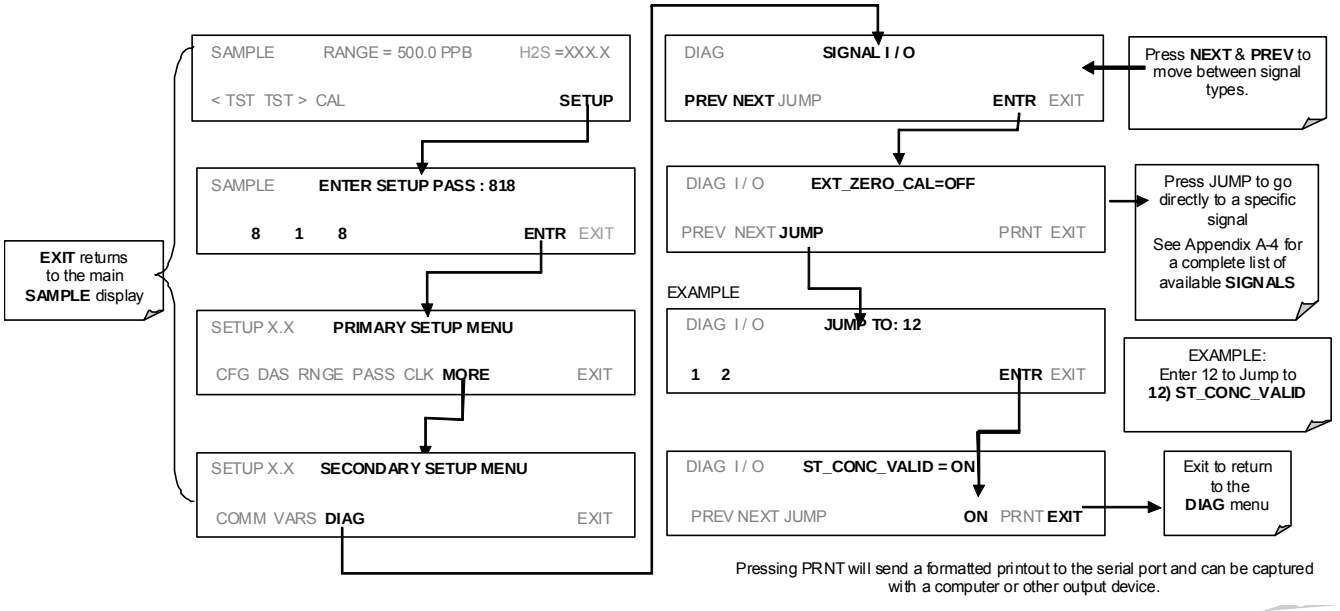

4.6.2. ANALOG OUTPUT STEP TEST

This test can be used to check the accuracy and proper operation of the analog outputs. The test forces all four analog output channels to produce signals ranging from 0% to 100% of the full scale range in 20% increments. This test is useful to verify the operation of the data logging/recording devices attached to the analyzer.

To begin the Anog Output Step Test press:

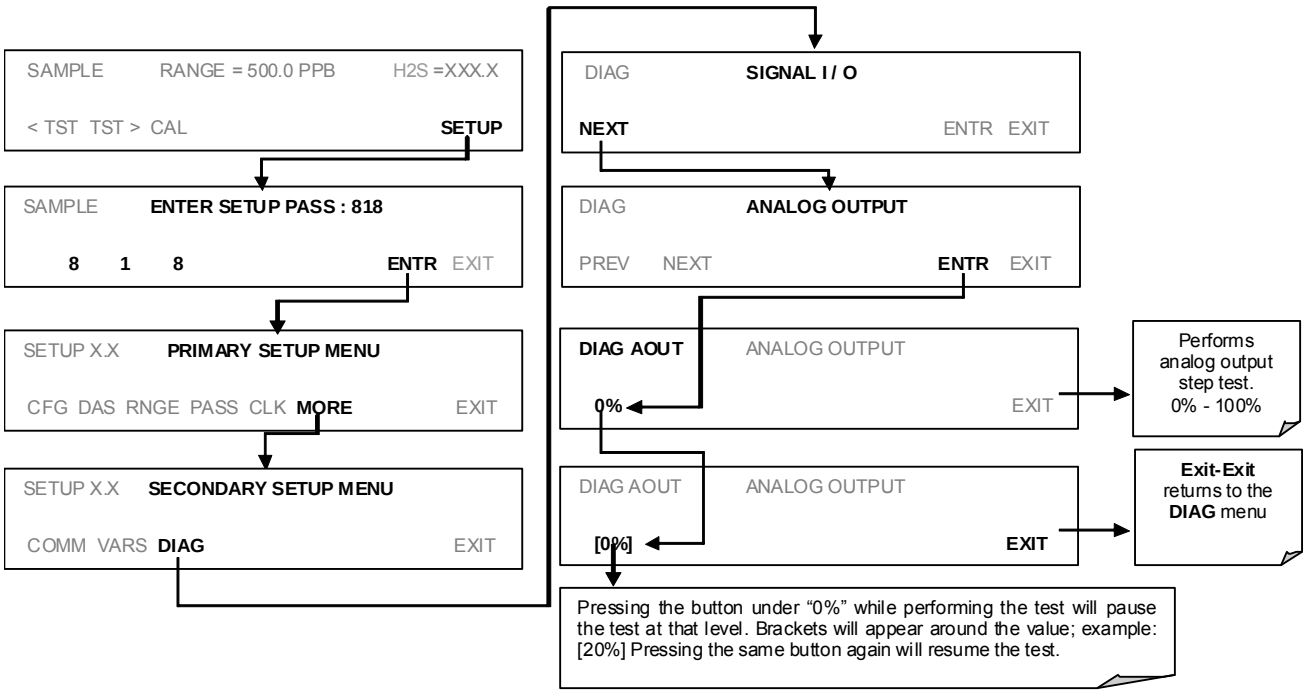

4.6.3. ANALOG I/O CONFIGURATION

Table 4-8 lists the analog I/O functions that are available in the T101.

Table 4-9. DIAG - Analog I/O Functions

SUB MENU	FUNCTION
AOUTS CALIBRATED:	Shows the status of the analog output calibration (YES/NO) and initiates a calibration of all analog output channels.
CONC_OUT_1	Sets the basic electronic configuration of the A1 analog output (H_2S). There are three options: • **RANGE**: Selects the signal type (voltage or current loop) and full scale level of the output. • **REC_OFS**: Allows setting a voltage offset (not available when RANGE is set to current loop. • **AUTO_CAL**: Performs the same calibration as AOUT CALIBRATED, but on this one channel only. NOTE: Any change to RANGE or REC_OFS requires recalibration of this output.
CONC_OUT_2	Same as for CONC_OUT_1 but for analog channel 2 (H_2S)
TEST OUTPUT	Same as for CONC_OUT_1 but for analog channel 4 (TEST)
AIN CALIBRATED	Shows the calibration status (YES/NO) and initiates a calibration of the analog to digital converter circuit on the motherboard.
XIN1 . . . **XIN8**	For each of 8 external analog inputs channels, shows the gain, offset, engineering units, and whether the channel is to show up as a Test function.

To configure the analyzer's four analog outputs, set the electronic signal type of each channel and calibrate the outputs. This consists of:

- Selecting an output type (voltage or current, if an optional current output driver has been installed) and the signal level that matches the input requirements of the recording device attached to the channel (Section 4.6.3.1).
- Calibrating the output channel. This can be done automatically or manually for each channel (Sections 4.6.3.2 and 4.6.3.3).
- Adding a bipolar recorder offset to the signal, if required (Section 4.6.3.4)

In its standard configuration, the analyzer's outputs can be set for the following DC voltages. Each range is usable from -5% to + 5% of the nominal range.

Table 4-10. Analog Output Voltage Ranges

RANGE	MINIMUM OUTPUT	MAXIMUM OUTPUT
0-0.1 V	-5 mV	+105 mV
0-1 V	-0.05 V	+1.05 V
0-5 V	-0.25 V	+5.25 V
0-10 V	-0.5 V	+10.5 V
The default offset for all ranges is 0 VDC.		

The following DC current output limits apply to the current loop modules:

Table 4-11. Analog Output Current Loop Range

RANGE	MINIMUM OUTPUT	MAXIMUM OUTPUT
0-20 mA	0 mA	20 mA
These are the physical limits of the current loop modules, typical applications use 2-20 or 4-20 mA for the lower and upper limits. Please specify desired range when ordering this option. The default offset for all ranges is 0 mA.		

Pin assignments for the output connector at the rear panel of the instrument are shown in Table 4-12.

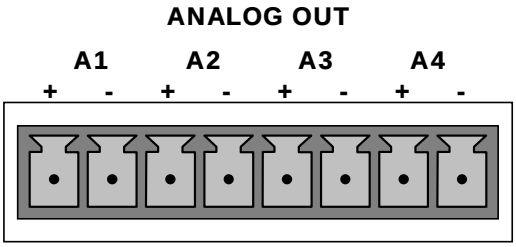

Table 4-12. Analog Output Pin Assignments

PIN	ANALOG OUTPUT	VOLTAGE SIGNAL	CURRENT SIGNAL
1	A1	V Out	I Out +
2		Ground	I Out -
3	A2	V Out	I Out +
4		Ground	I Out -
5	A3	Not Used	Not Used
7	A4	V Out	not available
8		Ground	not available

See Figure 3-4 for a the location of the analog output connector on the instrument's rear panel.

4.6.3.1. Analog Output Signal Type and Range Span Selection

To select an output signal type (DC Voltage or current) and level for one output channel, activate the ANALOG I/O CONFIGURATION MENU (see Section 4.6.3) then press:

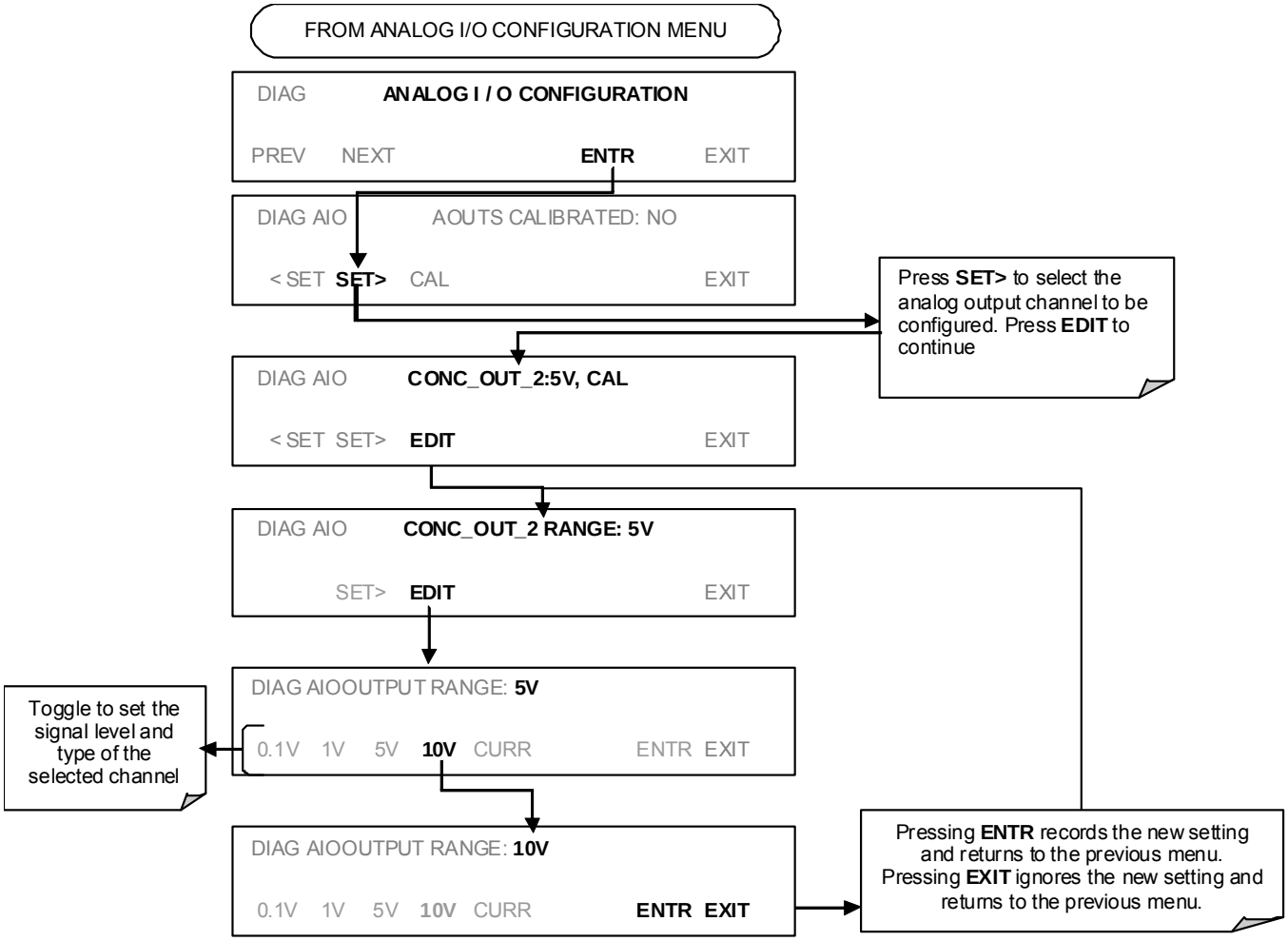

4.6.3.2. Analog Output Calibration Mode

Analog output calibration should be carried out on first startup of the analyzer (performed in the factory as part of the configuration process) or whenever recalibration is required. The analog outputs can be calibrated automatically, either as a group or individually, or adjusted manually.

In its default mode, the instrument is configured for automatic calibration of all channels, which is useful for clearing any analog calibration warnings associated with channels that will not be used or connected to any input or recording device, e.g., datalogger.

Manual calibration should be used for the 0.1V range or in cases where the outputs must be closely matched to the characteristics of the recording device. Manual calibration requires the AUTOCAL feature to be disabled.

To calibrate the outputs as a group, activate the ANALOG I/O configuration menu (see Section 4.6.3), then press:

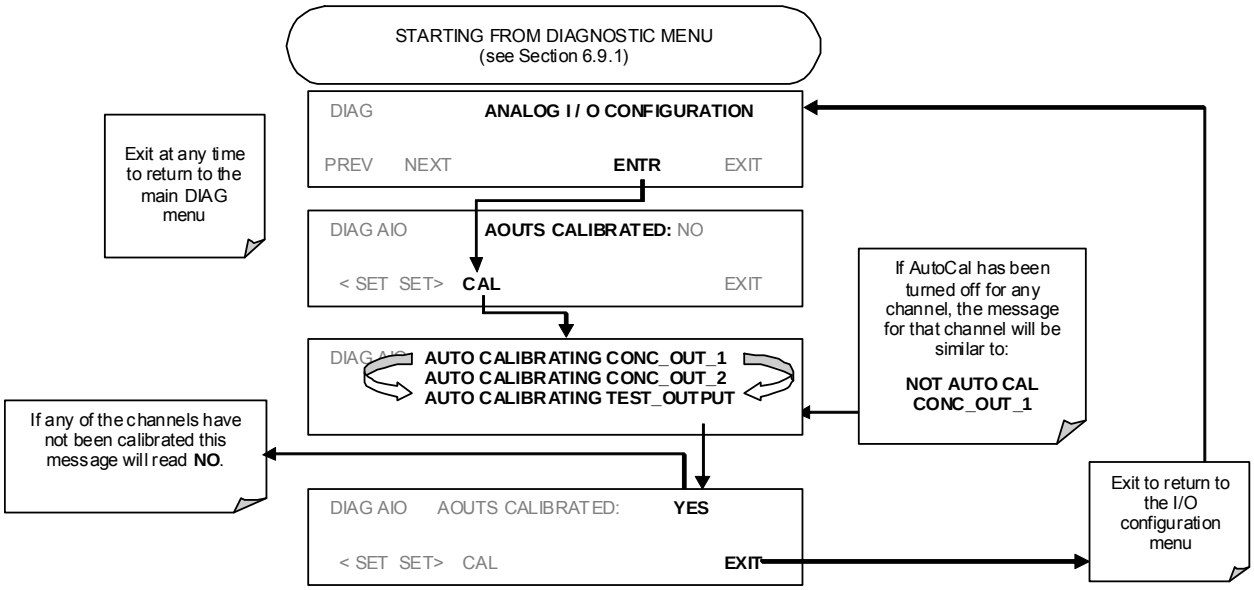

To automatically calibrate an single analog channel, activate the ANALOG **I/O CONFIGURATION MENU** (see Section 4.6.3), then press:

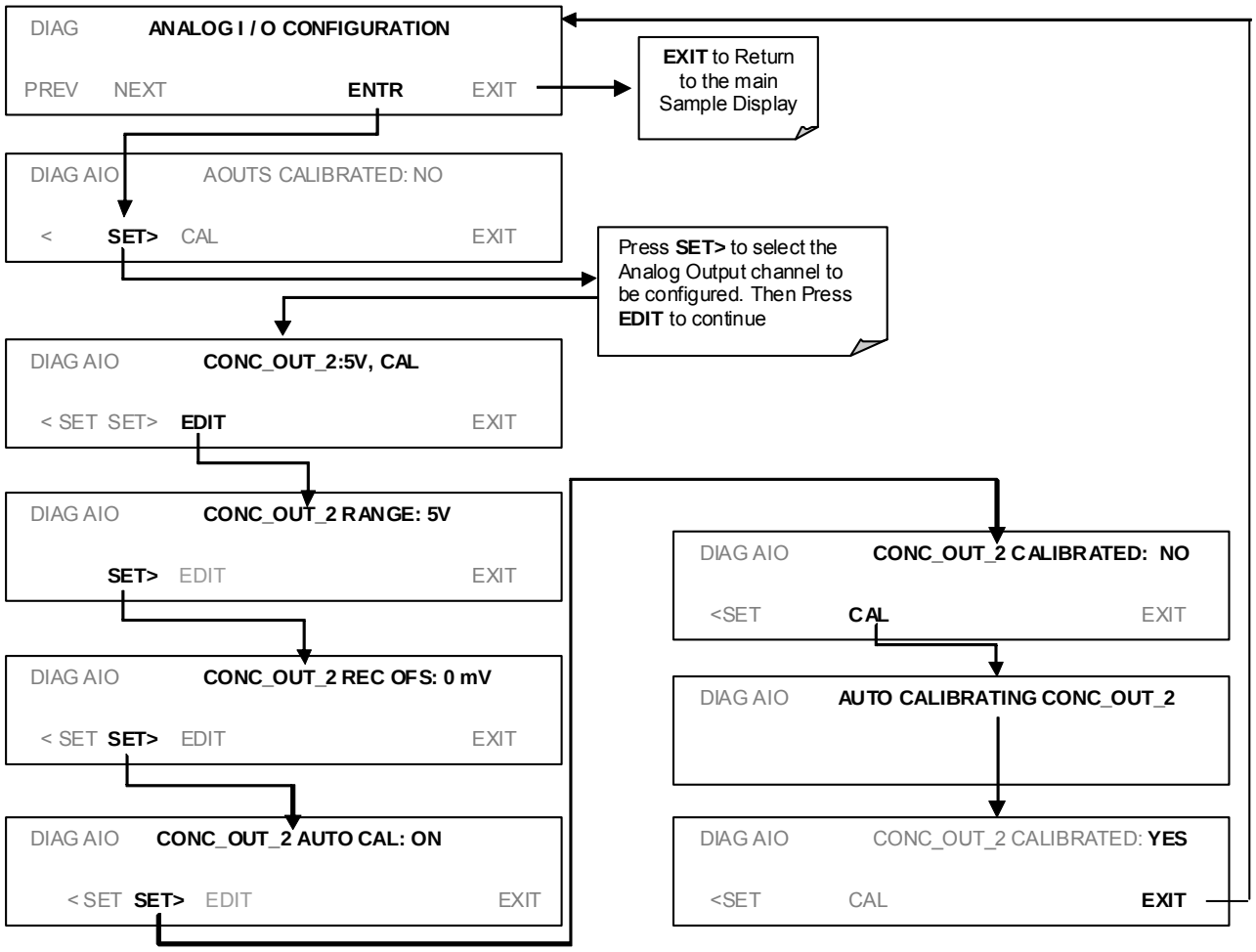

To select manual output calibration for a particular channel, activate the ANALOG **I/O CONFIGURATION MENU** (see Section 4.6.3), then press:

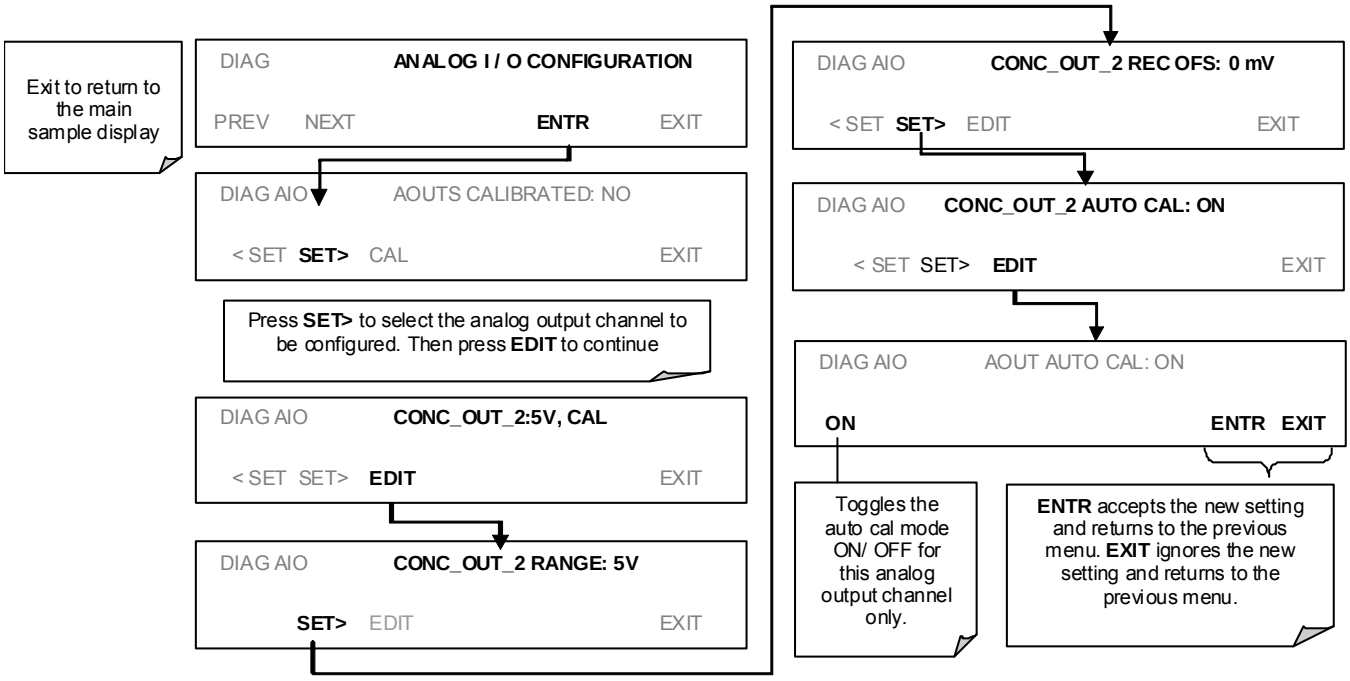

Now the analog output channels should either be automatically calibrated or they should be set to manual calibration, which is described next.

4.6.3.3. Manual Analog Output Calibration and Voltage Adjustment

For highest accuracy, the voltages of the analog outputs can be manually calibrated. Calibration is done through the instrument software with a voltmeter connected across the output terminals (Figure 4-4). Adjustments are made using the front panel buttons by setting the zero-point first and then the span-point (Table 4-13).

The software allows this adjustment to be made in 100, 10 or 1 count increments.

Table 4-13. Voltage Tolerances for Analog Output Calibration

Full Scale	Zero Tolerance	Span Voltage	Span Tolerance
0.1 VDC	±0.0005V	90 mV	±0.001V
1 VDC	±0.001V	900 mV	±0.001V
5 VDC	±0.002V	4500 mV	±0.003V
10 VDC	±0.004V	4500 mV	±0.006V

NOTE

Outputs configured for 0.1V full scale should always be calibrated manually.

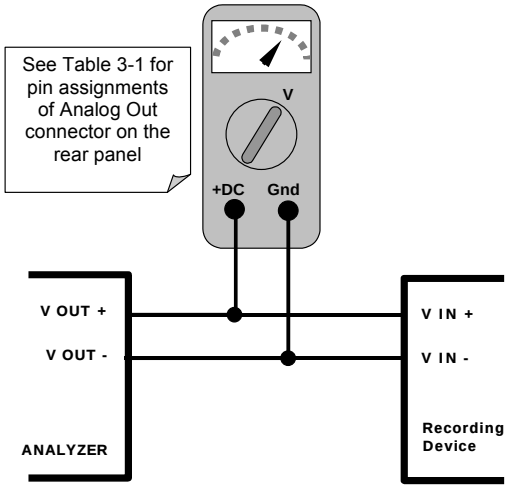

Figure 4-4. Setup for Calibrating Analog Outputs

To make these adjustments, the **AOUT** auto-calibration feature must be turned off (Section6.9). Activate the ANALOG I/O CONFIGURATION MENU (see Section 4.6.3), then press:

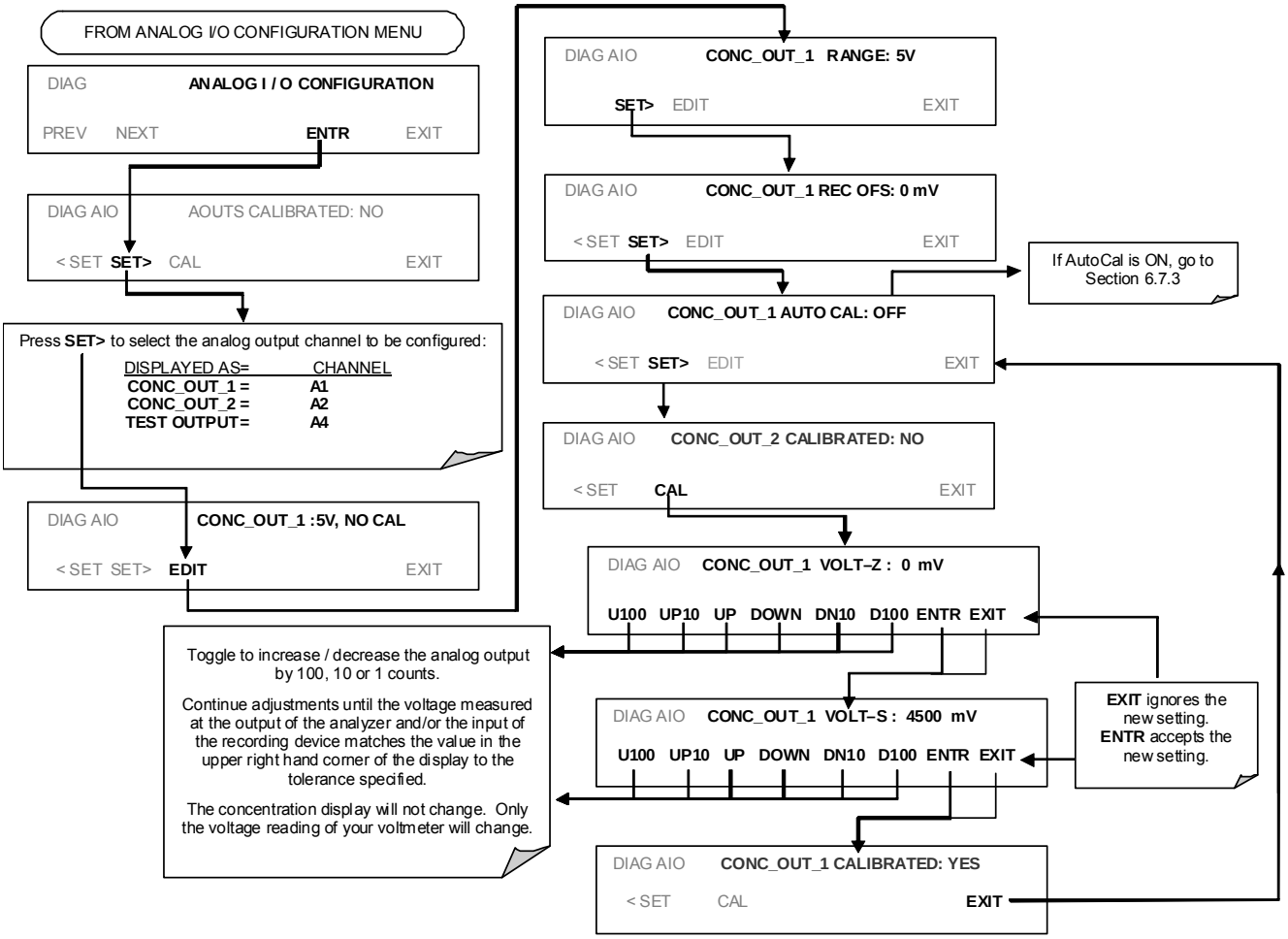

4.6.3.4. Analog Output Offset Adjustment

Some analog signal recorders require that the zero signal is significantly different from the baseline of the recorder in order to record slightly negative readings from noise around the zero point. This can be achieved in the T101 by defining a zero offset, a small voltage (e.g., 10% of span), which can be added to the signal of individual output channels by activating the ANALOG I/O CONFIGURATION MENU (see Section 4.6.3), then pressing:

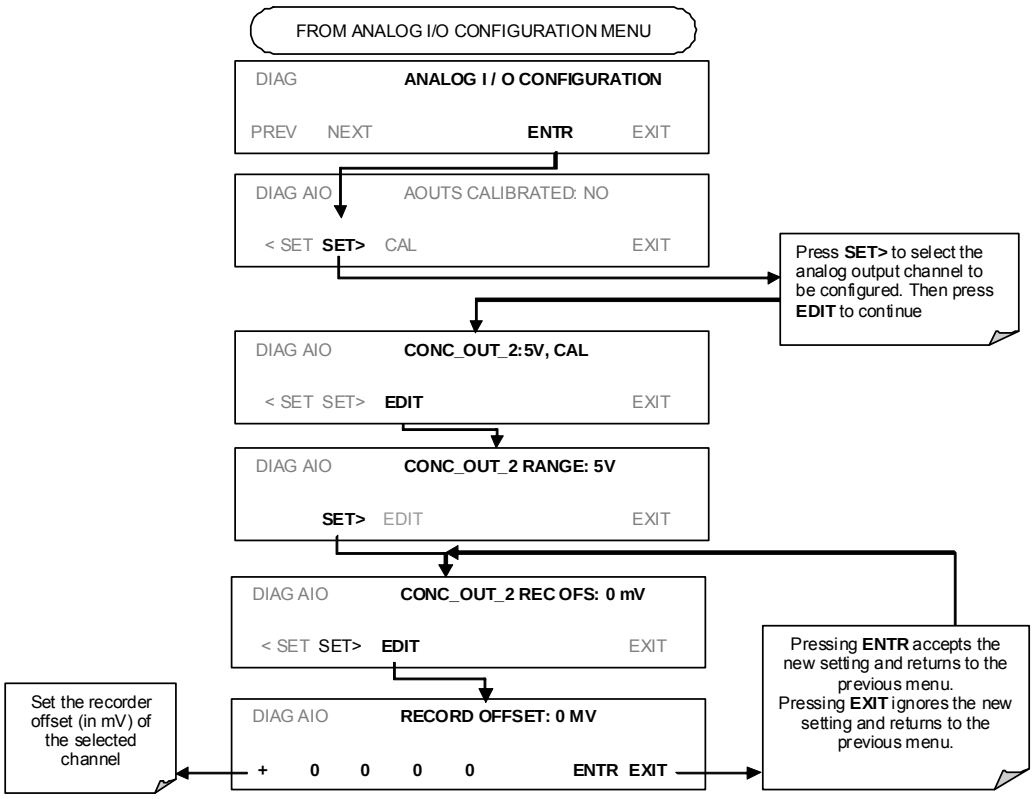

4.6.3.5. Current Loop Output Adjustment

A current loop option is available and can be installed as a retrofit for each of the analog outputs of the analyzer. This option converts the DC voltage analog output to a current signal with 0-20 mA output current. The outputs can be scaled to any set of limits within that 0-20 mA range. However, most current loop applications call for either 2-20 mA or 4-20 mA range. All current loop outputs have a +5% over-range. Ranges with the lower limit set to more than 1 mA (e.g., 2-20 or 4-20 mA) also have a -5% under-range.

To switch an analog output from voltage to current loop after installing the current output printed circuit assembly, follow the instructions in Section 4.6.3.1 and select curr from the list of options on the "Output Range" menu.

Adjusting the signal zero and span values of the current loop output is done by raising or lowering the voltage of the respective analog output. This proportionally raises or lowers the current produced by the current loop option.

Similar to the voltage calibration, the software allows this current adjustment to be made in 100, 10 or 1 count increments. Since the exact current increment per voltage count varies from output to output and from instrument to instrument, you will need to measure the change in the current with a current meter placed in series with the output circuit (Figure 4-5).

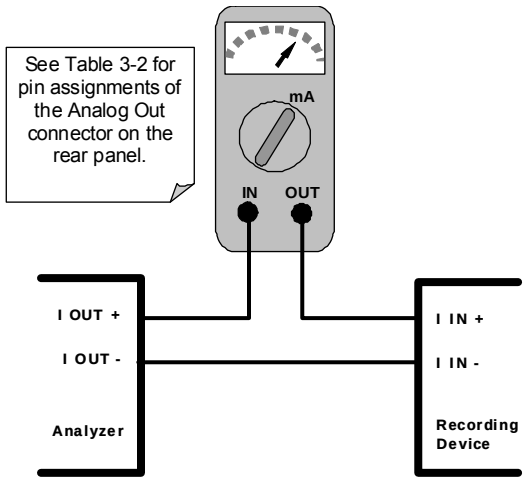

Figure 4-5. Setup for Calibrating Current Outputs

NOTE

Do not exceed 60 V between current loop outputs and instrument ground.

To adjust the zero and span values of the current outputs, activate the ANALOG I/O CONFIGURATION MENU (see Section 4.6.3), then press:

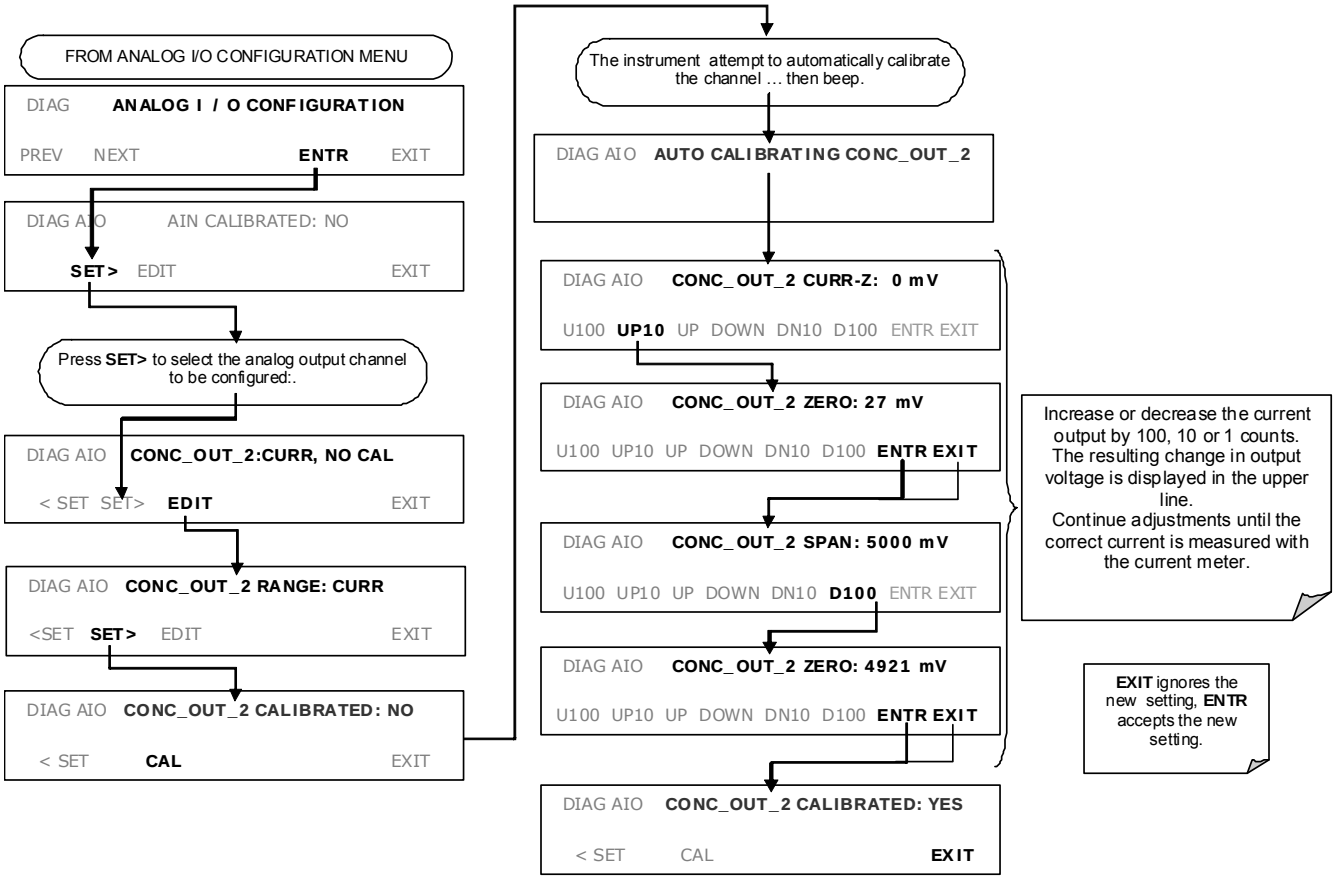

If a current meter is not available, an alternative method for calibrating the current loop outputs is to connect a 250 Ω ±1% resistor across the current loop output. Using a voltmeter, connected across the resistor, follow the procedure above but adjust the output to the following values:

Table 4-14. Current Loop Output Calibration with Resistor

FULL SCALE	VOLTAGE FOR 2-20 MA (measured across resistor)	VOLTAGE FOR 4-20 MA (measured across resistor)
0%	0.5 V	1.0 V
100%	5.0 V	5.0 V

4.6.3.6. AIN Calibration

This is the sub-menu to conduct the analog input calibration. This calibration should only be necessary after major repair such as a replacement of CPU, motherboard or power supplies. Activate the ANALOG I/O CONFIGURATION MENU (see Section 4.6.3), then press:

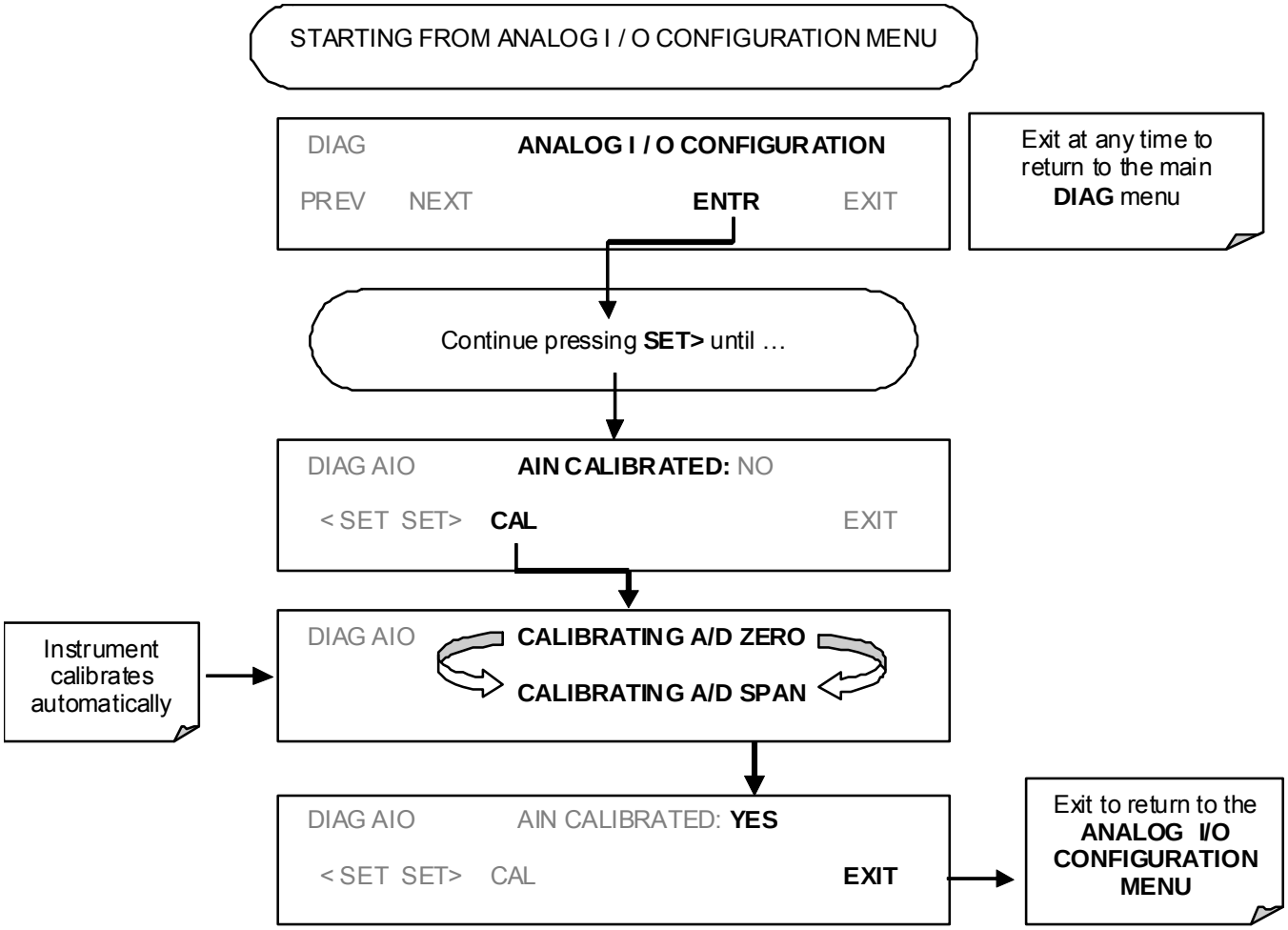

4.6.3.7. Analog Inputs (XIN1…XIN8) Option Configuration

To configure the analyzer's **optional analog inputs** define for each channel**:**

- gain (number of units represented by 1 volt)
- offset (volts)
- engineering units to be represented in volts (each press of the touchscreen button scrolls the list of alphanumeric characters from A-Z and 0-9)
- whether to display the channel in the Test functions

To adjust settings for the Analog Inputs option parameters press:

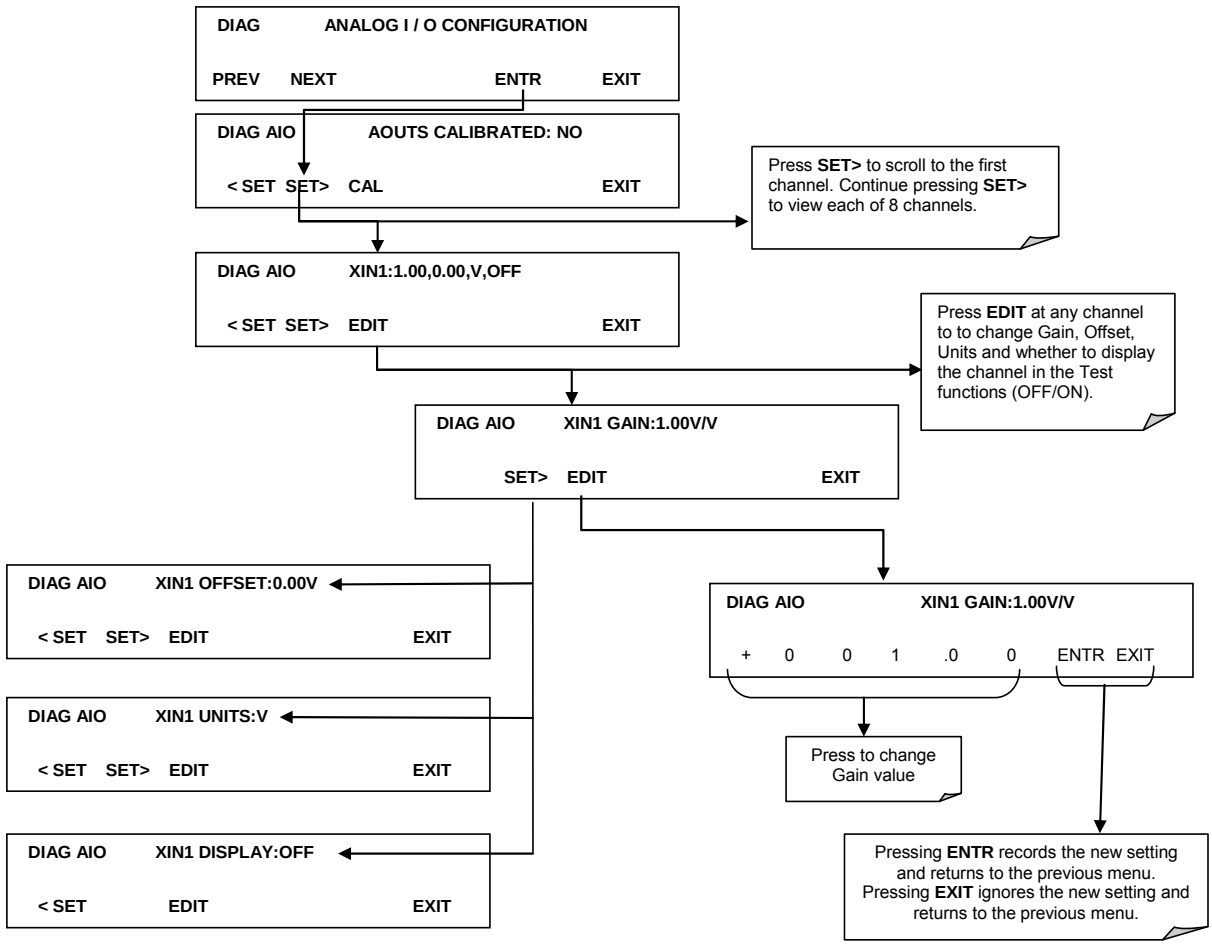

Figure 4-6. DIAG – Analog Inputs (Option) Configuration Menu

4.6.4. OPTIC TEST

The optic test function tests the response of the PMT sensor by turning on an LED located in the cooling block of the PMT (Fig. 10-15). The analyzer uses the light emitted from the LED to test its photo-electronic subsystem, including the PMT and the current to voltage converter on the pre-amplifier board. To make sure that the analyzer measures only the light coming from the LED, the analyzer should be supplied with zero air. The optic test should produce a PMT signal of about 2000±1000 mV. To activate the electrical test press:

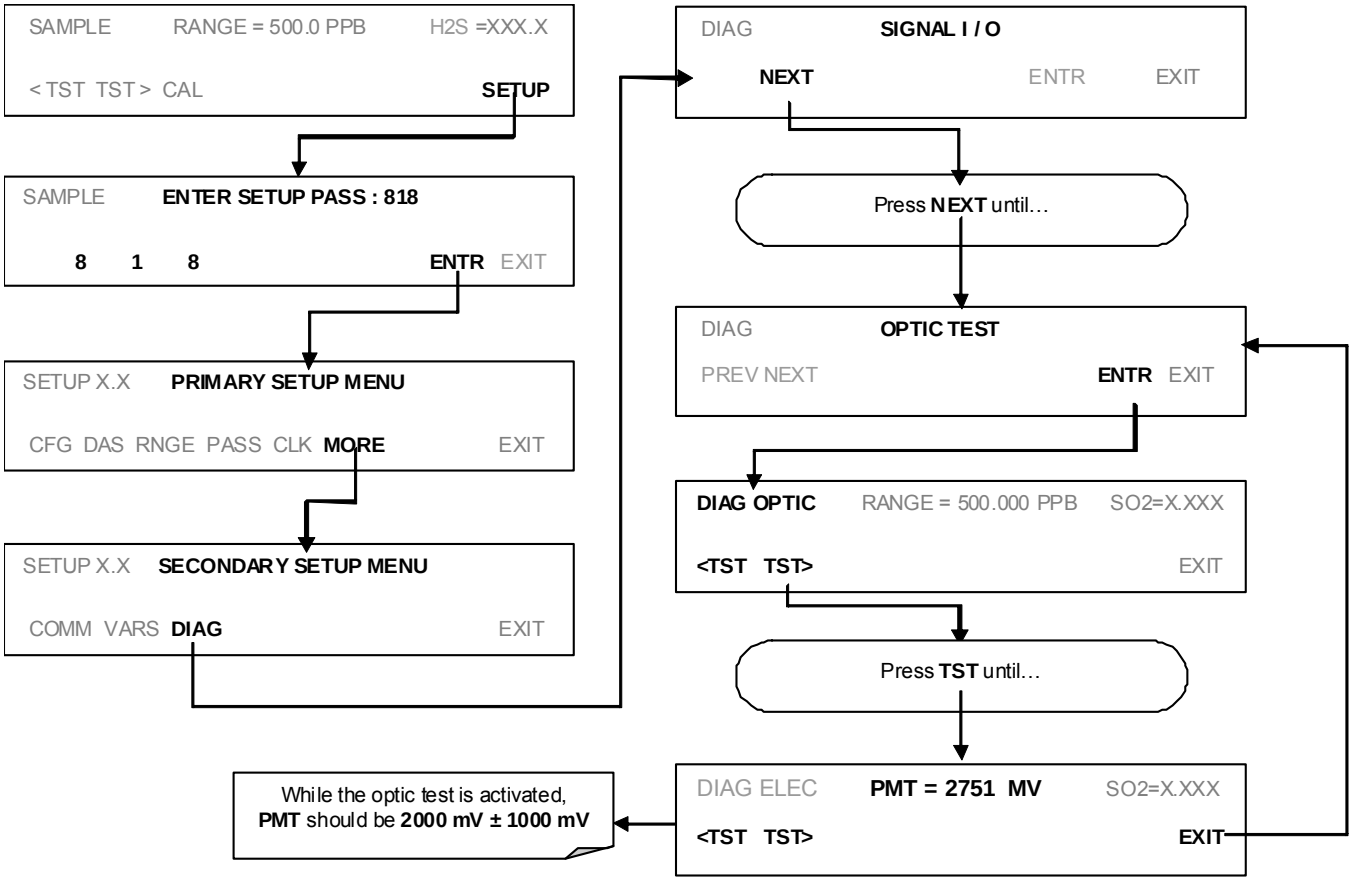

NOTE

This is a coarse test for functionality and not an accurate calibration tool. The resulting PMT signal can vary significantly over time and also changes with low-level calibration.

4.6.5. ELECTRICAL TEST

The electrical test function creates a current, which substitutes the PMT signal, and feeds it into the preamplifier board. This signal is generated by circuitry on the pre-amplifier board itself and tests the filtering and amplification functions of that assembly along with the A/D converter on the motherboard. It does not test the PMT itself. The electrical test should produce a PMT signal of about 2000 ±1000 mV.

To activate the electrical test press:

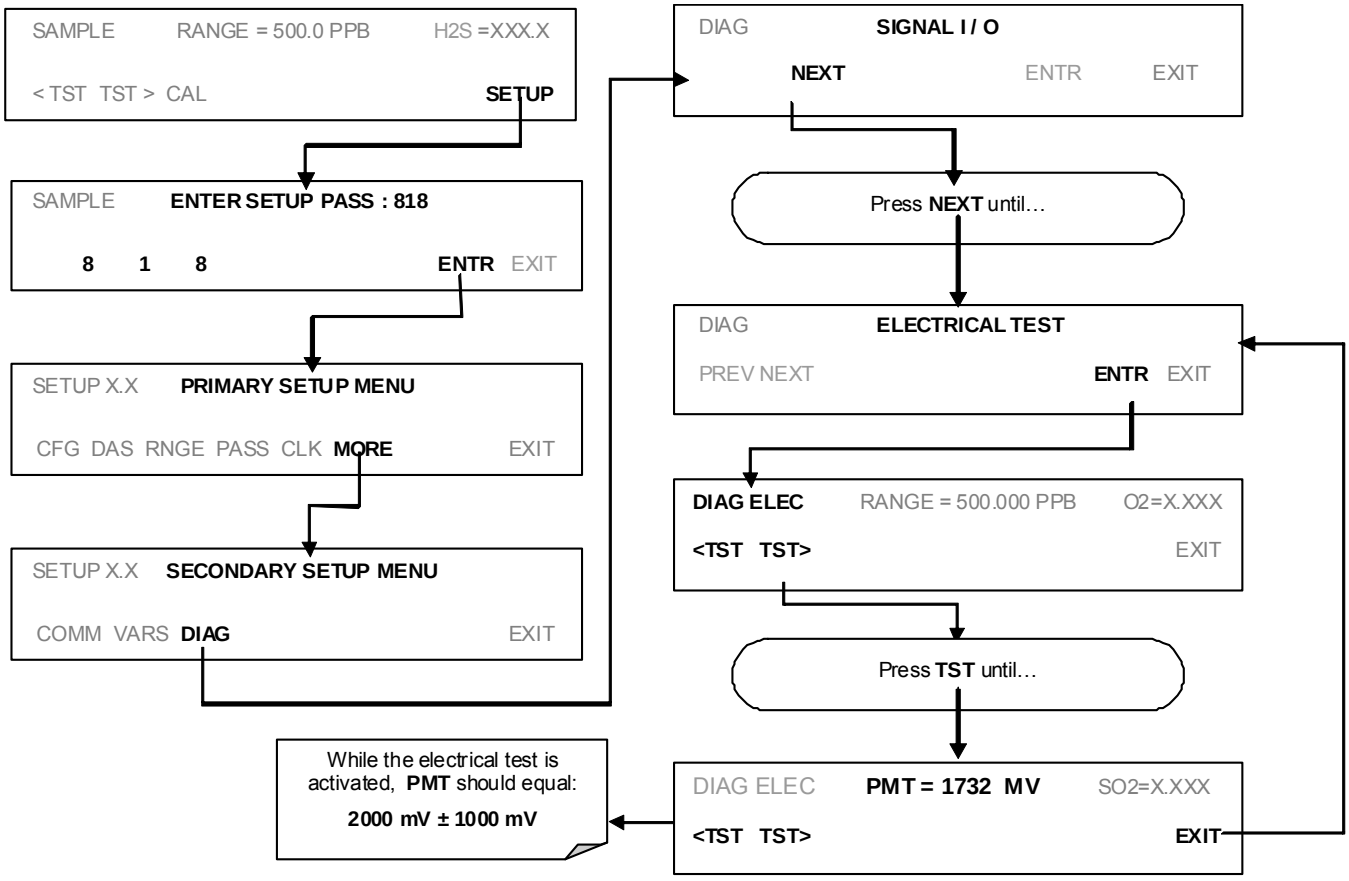

4.6.6. LAMP CALIBRATION

An important factor in accurately determining H_2S concentration, once the H_2S is converted to SO_2, is the amount of UV light available to transform the SO_2 into SO_2* (see Sections 10.1.1 and 10.1.2). The Model T101 compensates for variations in the intensity of the available UV light by adjusting the H_2S concentration calculation using a ratio (**LAMP RATIO**)that results from dividing the current UV lamp (**UV LAMP)** intensity by a value stored in the CPU's memory (**LAMP_CAL**). Both LAMP Ratio and UV Lamp are test functions viewable from the instrument's front panel.

To cause the analyzer to measure and record a value for **LAMP_CAL**, press:

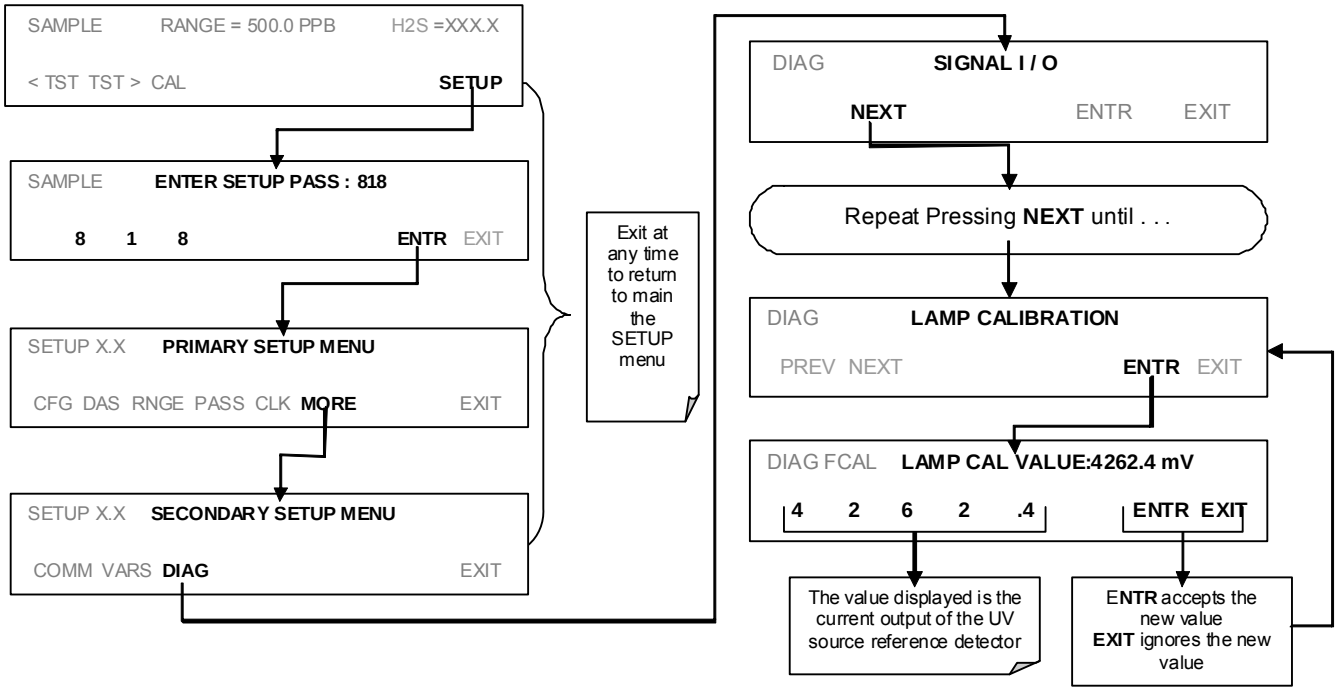

4.6.7. PRESSURE CALIBRATION

A sensor at the exit of the sample chamber continuously measures the pressure of the sample gas. This data is used to compensate the final H_2S concentration calculation for changes in atmospheric pressure when the instrument's TPC feature (see Section 10.7.3) is turned on and is stored in the CPU's memory as the test function **PRES** (also viewable via the front panel).

To cause the analyzer to measure and record a value for **PRES**, press:

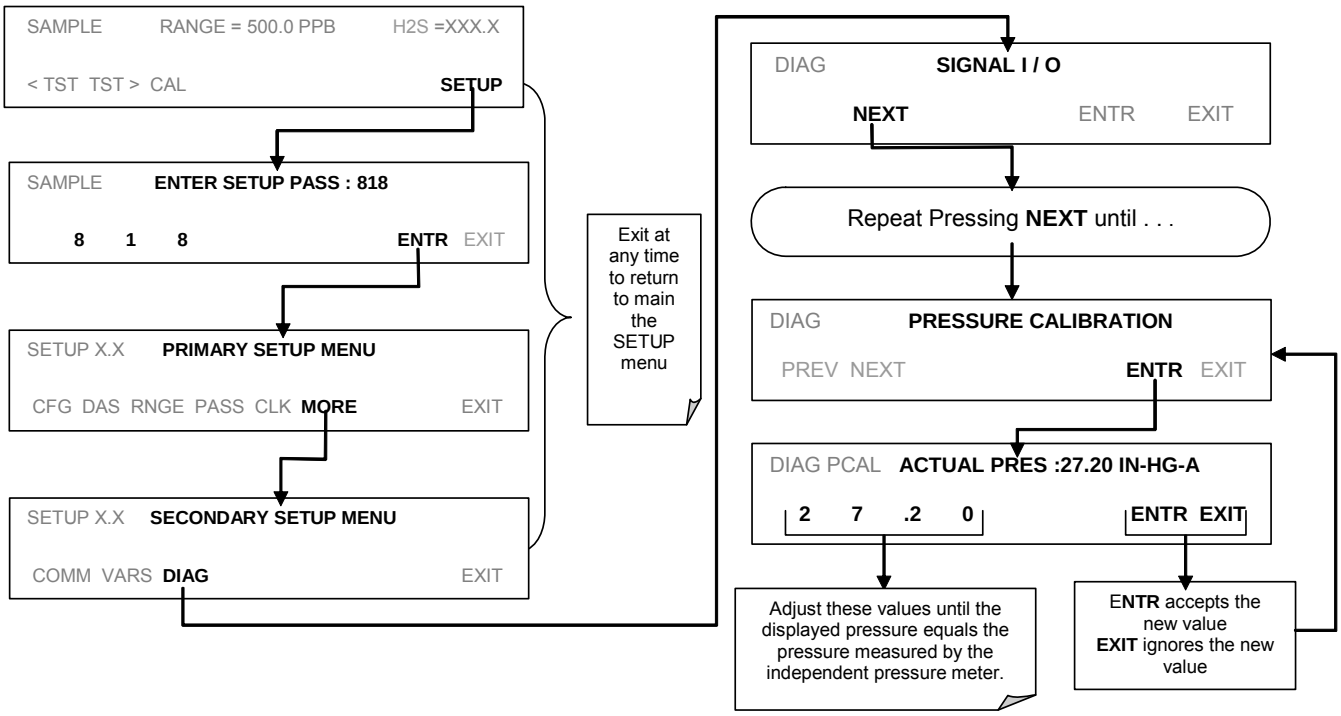

4.6.8. FLOW CALIBRATION

The flow calibration allows the user to adjust the values of the sample flow rates as they are displayed on the front panel and reported through COM ports to match the actual flow rate measured at the sample inlet. This does not change the hardware measurement of the flow sensors, only the software calculated values.

To carry out this adjustment, connect an external, sufficiently accurate flow meter to the sample inlet (see Section 9.5.2 for more details). Once the flow meter is attached and is measuring actual gas flow, press:

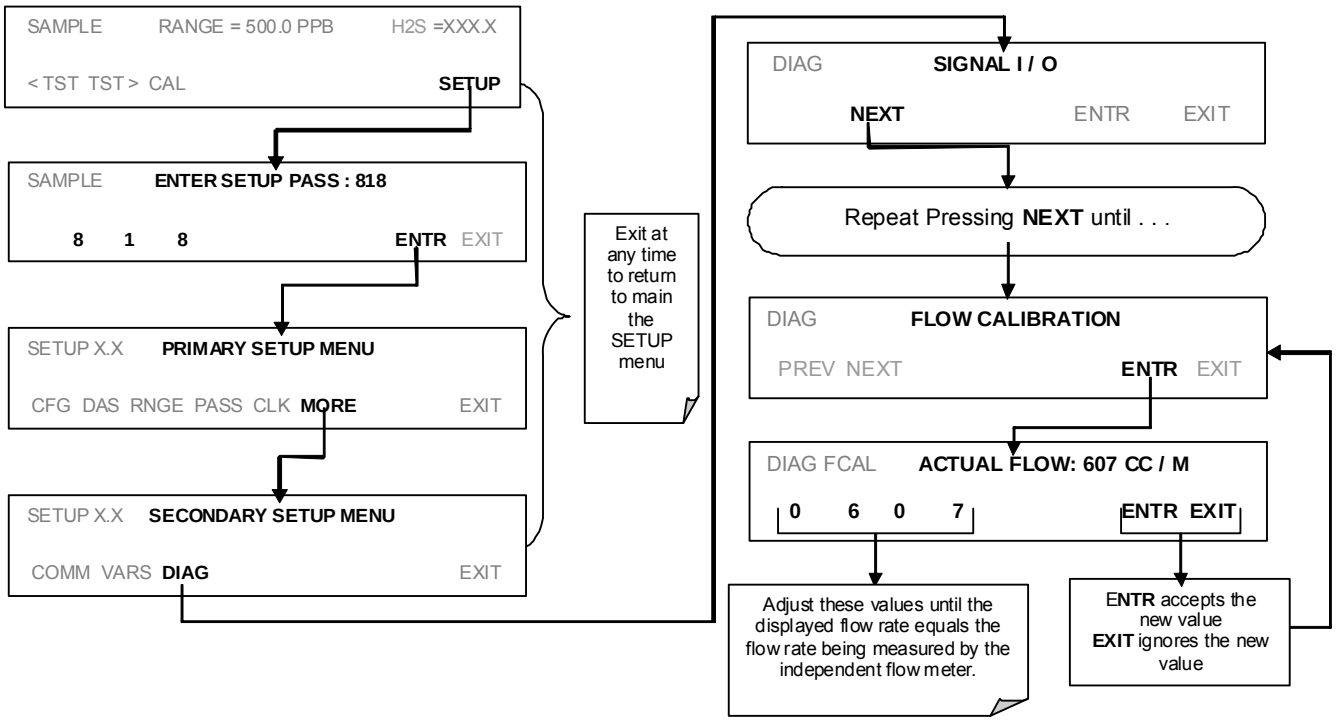

4.6.9. TEST CHANNEL OUTPUT

When activated, output channel **A4** can be used to report one of the test functions viewable from the SAMPLE mode display. To activate the A4 channel and select a test function, follow this button sequence :

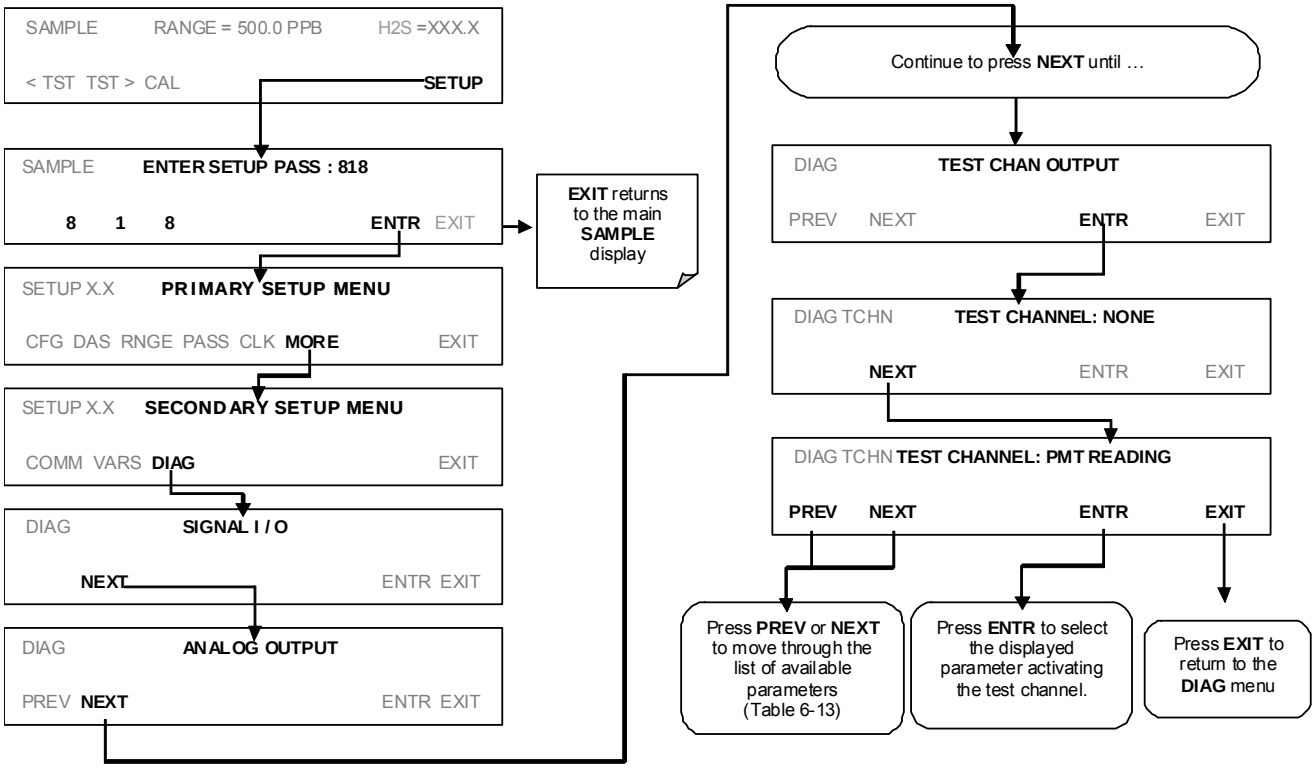

Table 4-15. Test Parameters Available for Analog Output A4

TEST CHANNEL	TEST PARAMETER RANGE [1]
NONE	Test channel is turned off
PMT READING	0-5000 mV
UV READING	0-5000 mV
SAMPLE PRESSURE	0-40 in-Hg-A
SAMPLE FLOW	0-1000 cm³/min
RCELL TEMP	0-70° C
CHASSIS TEMP	0-70° C
IZS TEMP	0-70° C
PMT TEMP	0-50° C
CHASSIS TEMP	0-70° C
HVPS VOLTAGE	0-5000 V

[1] This refers to the voltage range of the parameter and not the output signal of the test channel.

Once a TEST function is selected, the instrument begins to report a signal on the **A4** output and adds **TEST=** to the list of test functions viewable on the display (just before the TIME display).

4.7. SETUP – COMM: SETTING UP THE ANALYSER'S COMMUNICATION PORTS

For remote operation the T101 is equipped with an Ethernet port, a USB port and two serial communication (com) ports located on the rear panel. Both com ports (labeled RS232, which is the COM1 port, and COM2) operate similarly and give the user the ability to communicate with, issue commands to, and receive data from the analyzer through an external computer system or terminal. By default, both ports operate on the RS-232 protocol.

The RS232 port can also be configured to operate in single or RS-232 Multidrop mode (Option 62). The COM2 port can be left in its default configuration for standard RS-232 operation, or reconfigured for half-duplex RS-485 operation; (contact the factory for configuration information). When COM2 is configured for RS-485 communication, the rear panel USB port is disabled.

A code-activated switch (CAS), can also be used on either port to connect typically between 2 and 16 send/receive instruments (host computer(s) printers, data loggers, analyzers, monitors, calibrators, etc.) into one communications hub. Contact Teledyne API's Sales for more information on CAS systems.

4.7.1. INSTRUMENT ID

Each type of Teledyne API's analyzer is configured with a default ID code. The default ID code for all T101 analyzers is either "**0**" or **101**. The ID number is only important if more than one analyzer is connected to the same communications channel such as when several analyzers are on the same Ethernet LAN, in a RS-232 Multidrop chain, or operating over a RS-485 network. If two analyzers of the same model type are used on one channel, the ID codes of one or both of the instruments needs to be changed so that they are unique to the instruments.

To edit the instrument's ID code, press:

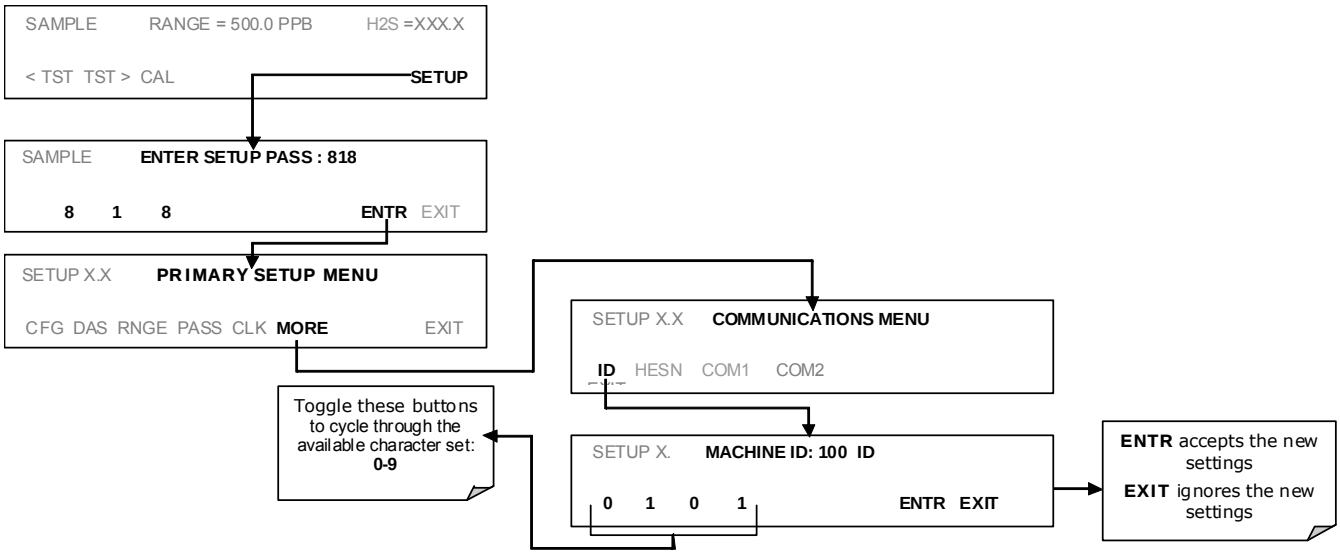

The ID can be any 4 digit number and can also be used to identify analyzers in any number of ways (e.g. location numbers, company asset number, etc.)

4.7.2. COM PORT DEFAULT SETTINGS

As received from the factory, the analyzer is set up to emulate a DCE or modem, with pin 3 of the DB-9 connector designated for receiving data and pin 2 designated for sending data.

- **RS232**: RS-232 (fixed), DB-9 male connector.
  - **Baud rate**: 115200 bits per second (baud).
  - **Data Bits**: 8 data bits with 1 stop bit.
  - **Parity**: None.
- **COM2**: RS-232 (configurable), DB-9 female connector.
  - **Baud rate**: 19200 bits per second (baud).
  - **Data Bits**: 8 data bits with 1 stop bit.
  - **Parity**: None.

CAUTION

Cables that appear to be compatible because of matching connectors may incorporate internal wiring that make the link inoperable. Check cables acquired from sources other than Teledyne API for pin assignments before using.

4.7.3. RS-232 COM PORT CABLE CONNECTIONS

In its default configuration, the T101 analyzer has two available RS-232 Com ports accessible via 2 DB-9 connectors on the back panel of the instrument. The COM1 connector is a male DB-9 connector and the COM2 is a female DB9 connector.

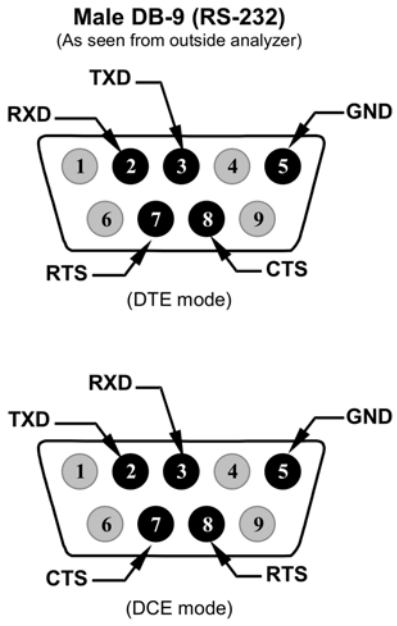

Figure 4-7. Rear Panel Connector Pin-Outs for RS-232 Mode

The signals from these two connectors are routed from the motherboard via a wiring harness to two 10-pin connectors on the CPU card, J11 and J12.

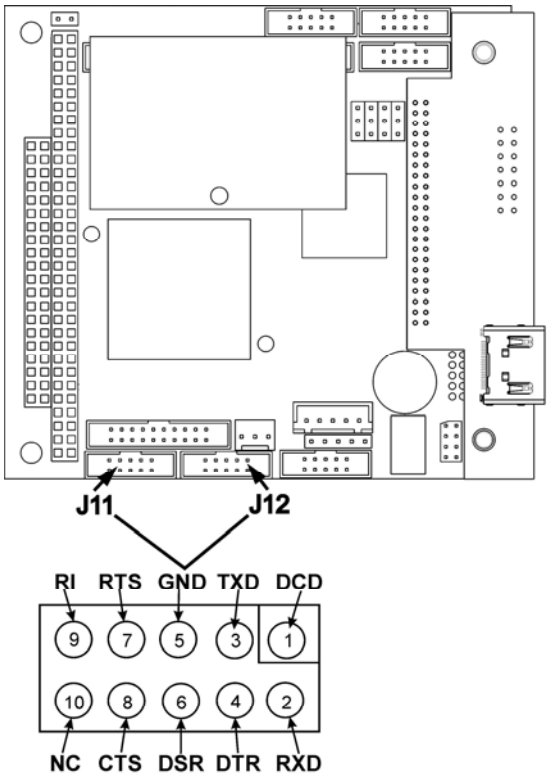

Figure 4-8. CPU Connector Pin-Outs for RS-232 Mode

Teledyne API offers two mating cables, one of which should be applicable for your use.

- Part number WR000077, a DB-9 female to DB-9 female cable, 6 feet long. Allows connection of COM1 with the serial port of most personal computers.
- Part number WR000024, a DB-9 female to DB-25 male cable. Allows connection to the most common styles of modems (e.g. Hayes-compatible) and code activated switches.

Both cables are configured with straight-through wiring and should require no additional adapters.

To assist in properly connecting the serial ports to either a computer or a modem, there are activity indicators just above the COM1 port. Once a cable is connected between the analyzer and a computer or modem, both the red and green LEDs should be on. If the lights for COM 1 are not lit, use small switch on the rear panel to switch it between DTE and DCE modes (see Section 4.7.5). If both LEDs are still not illuminated, check the cable for proper wiring.

The two LEDs located over COM2 are currently deactivated. If you have problems getting COM2 to activate, it may be necessary to install a null-modem cable (contact Technical Support for information).

4.7.4. RS-485 CONFIGURATION

As delivered from the factory, COM2 is configured for RS-232 communications. This port can be re-configured for operation as a non-isolated, half-duplex RS-485 port capable of supporting up to 32 instruments with a maximum distance between the host and the furthest instrument being 4000 feet. However, with the RS-485 configuration the USB comm port is disabled. If you require full-duplex or isolated operation, please contact Teledyne API's Technical Support.

4.7.5. DTE AND DCE COMMUNICATION

RS-232 was developed for allowing communications between data terminal equipment (DTE) and data communication equipment (DCE). Basic terminals always fall into the DTE category whereas modems are always considered DCE devices. The difference between the two is the pin assignment of the Data Receive and Data Transmit functions.

- DTE devices receive data on pin 2 and transmit data on pin 3.
- DCE devices receive data on pin 3 and transmit data on pin 2.

To allow the analyzer to be used with terminals (DTE), modems (DCE) and computers (which can be either), a switch mounted below the serial ports on the rear panel allows the user to set the configuration of COM1 for one of these two modes. This switch exchanges the receive and transmit lines on COM1 emulating a cross-over or null-modem cable. The switch has no effect on COM2.

4.7.6. ETHERNET CONFIGURATION

For network or Internet communication, the analyzer can be connected to any standard 10BaseT or 100BaseT Ethernet network via low-cost network hubs, switches or routers. The interface operates as a standard TCP/IP device on port 3000. This allows a remote computer to connect through the internet to the analyzer using APICOM, terminal emulators or other programs.

The Ethernet cable connector on the rear panel has two LEDs indicating the Ethernet's current operating status.

Table 4-16. Ethernet Status Indicators

LED	FUNCTION
amber (link)	On when connection to the LAN is valid.
green (activity	Flickers during any activity on the LAN.

4.7.6.1. Configuring the Ethernet Interface Using DHCP

The analyzer is shipped with DHCP enabled by default. This allows the instrument to be connected to a network or router with a DHCP server. Consult with your network administrator to affirm that your network server is running DHCP. If so, the instrument

will automatically be assigned an IP address by the DHCP server (Section 4.10.6.2). This configuration is useful for quickly getting an instrument up and running on a network. However, for permanent Ethernet connections, a static IP address should be used. Section 4.7.6.2 below details how to configure the instrument with a static IP address.

NOTE

It is a good idea to check these settings the first time you power up your analyzer after it has been physically connected to the LAN/Internet to make sure that the DHCP has successfully downloaded the appropriate information from you network server(s).

If the gateway IP, instrument IP and the subnet mask are all zeroes (e.g. "0.0.0.0"), the DCHP was not successful.

You may have to manually configure the analyzer's Ethernet properties. See your network administrator.

To view the LAN/Internet default configuration properties, press:

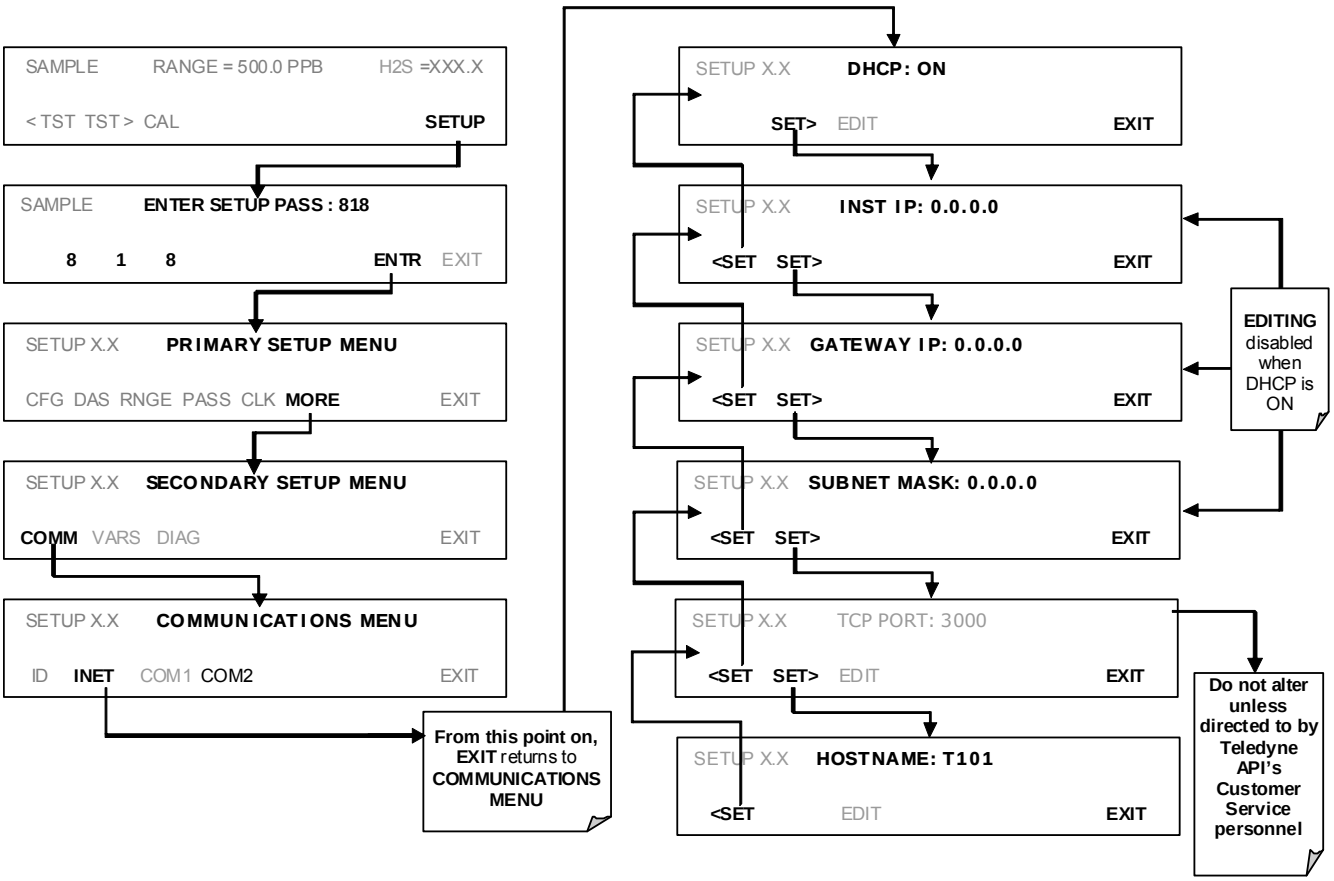

4.7.6.2. Manually Configuring the Ethernet with Static IP Addresses

1. Connect a cable from the analyzer's Ethernet port to a Local Area Network (LAN) or Internet port.

2. Access Ethernet configuration through: SETUP>MORE>COMM>INET.

3. Follow the setup sequence as shown in the illustrations that follow, and edit the Instrument and Gateway IP addresses and Subnet Mask to the desired settings. (From the computer, enter the same information through an application such as HyperTerminal).

Table 4-17. LAN / Internet Default Configuration Properties

PROPERTY	DEFAULT STATE	DESCRIPTION
DHCP	ON	This displays whether the DHCP is turned ON or OFF. Press EDIT and toggle ON for automatic configuration after first consulting network administrator.
INSTRUMENT IP ADDRESS	0.0.0.0	This string of four packets of 1 to 3 numbers each (e.g. 192.168.76.55.) is the address of the analyzer itself.
GATEWAY IP ADDRESS	0.0.0.0	Can only be edited when DHCP is set to OFF. A string of numbers very similar to the Instrument IP address (e.g. 192.168.76.1.) that is the address of the computer used by your LAN to access the Internet.
SUBNET MASK	0.0.0.0	Can only be edited when DHCP is set to OFF. Also a string of four packets of 1 to 3 numbers each (e.g. 255.255.252.0) that identifies the LAN to which the device is connected. All addressable devices and computers on a LAN must have the same subnet mask. Any transmissions sent to devices with different subnets are assumed to be outside of the LAN and are routed through the gateway computer onto the Internet.
TCP PORT[1]	3000	This number defines the terminal control port by which the instrument is addressed by terminal emulation software, such as Internet or Teledyne API's APICOM.
HOST NAME	T101	The name by which your analyzer will appear when addressed from other computers on the LAN or via the Internet. To change, see Section 4.7.6.3.

[1] Do not change the setting for this property unless instructed to by Teledyne API's Technical Support personnel.

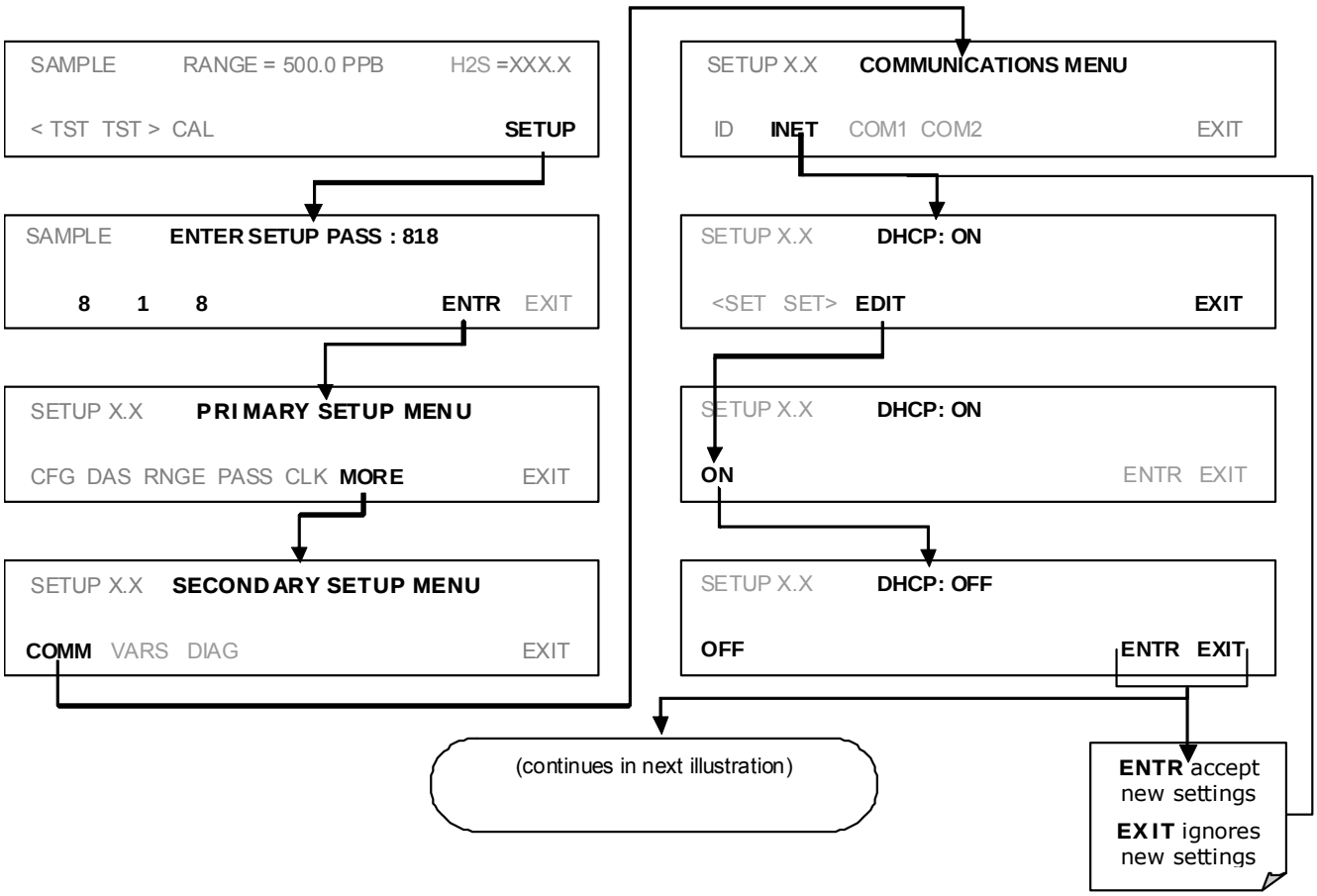
SAMPLE RANGE = 500.0 PPB H2S =XXX.X
< TST TST > CAL SETUP
SAMPLE ENTER SETUP PASS : 818
8 1 8 ENTR EXIT
SETUP X.X PRIMARY SETUP MENU
CFG DAS RNGE PASS CLK MORE EXIT
SETUP X.X SECONDARY SETUP MENU
COMM VARS DIAG EXIT
SETUP X.X COMMUNICATIONS MENU
ID INET COM1 COM2 EXIT
SETUP X.X DHCP: ON
<SET SET> EDIT EXIT
SETUP X.X DHCP: ON
ON ENTR EXIT
SETUP X.X DHCP: OFF
OFF ENTR EXIT
(continues in next illustration)
ENTR accept new settings
EXIT ignores new settings

Configure the **INSTRUMENT IP**, **GATEWAY IP** and **SUBNET MASK** addresses:

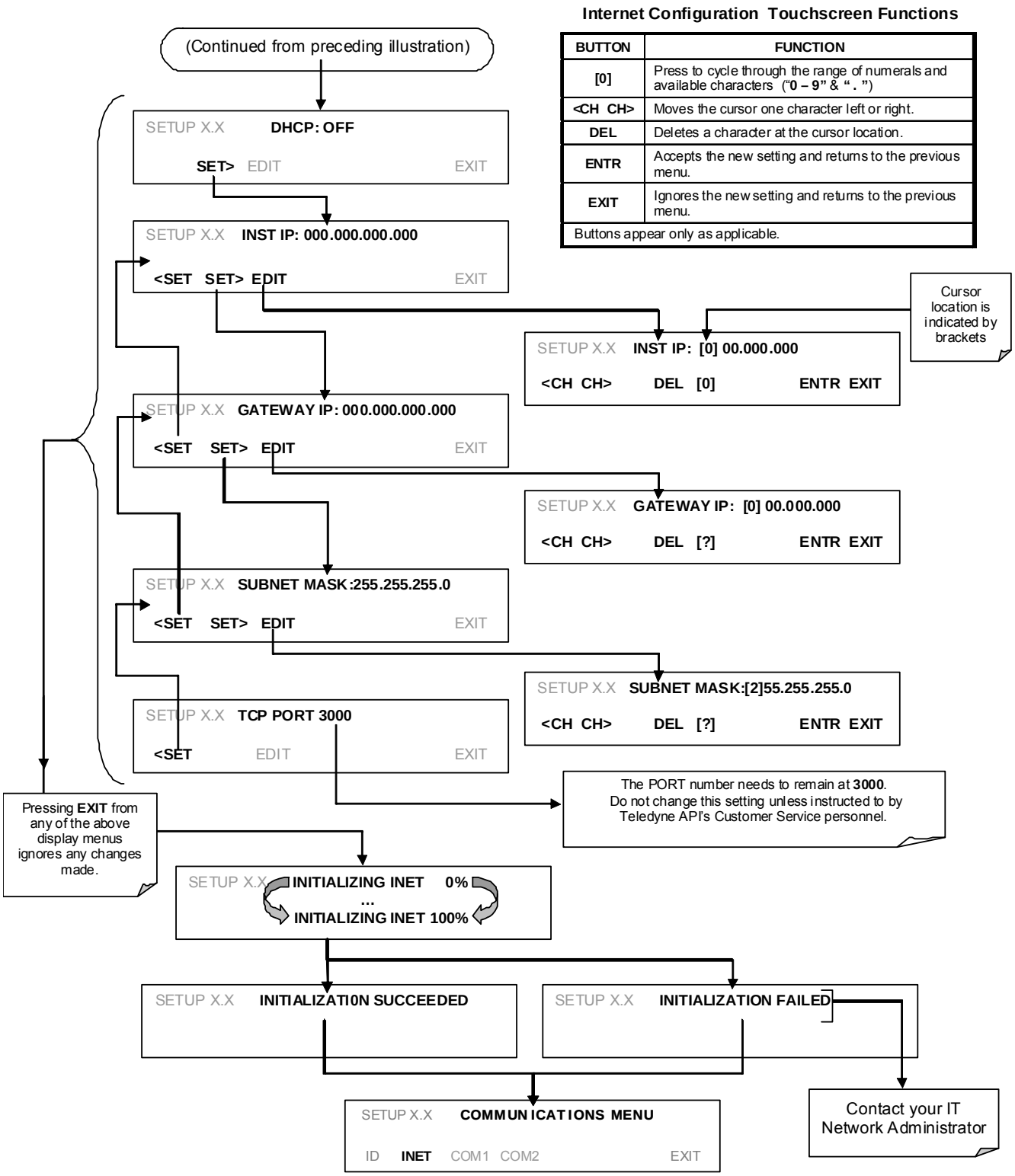

4.7.6.3. Changing the Analyzer's HOSTNAME

The **HOSTNAME** is the name by which the analyzer appears on your network. The default name for all Teledyne API Model T101 analyzers is **T101**. To change this name (particularly if you have more than one Model T101 analyzer on your network), press.

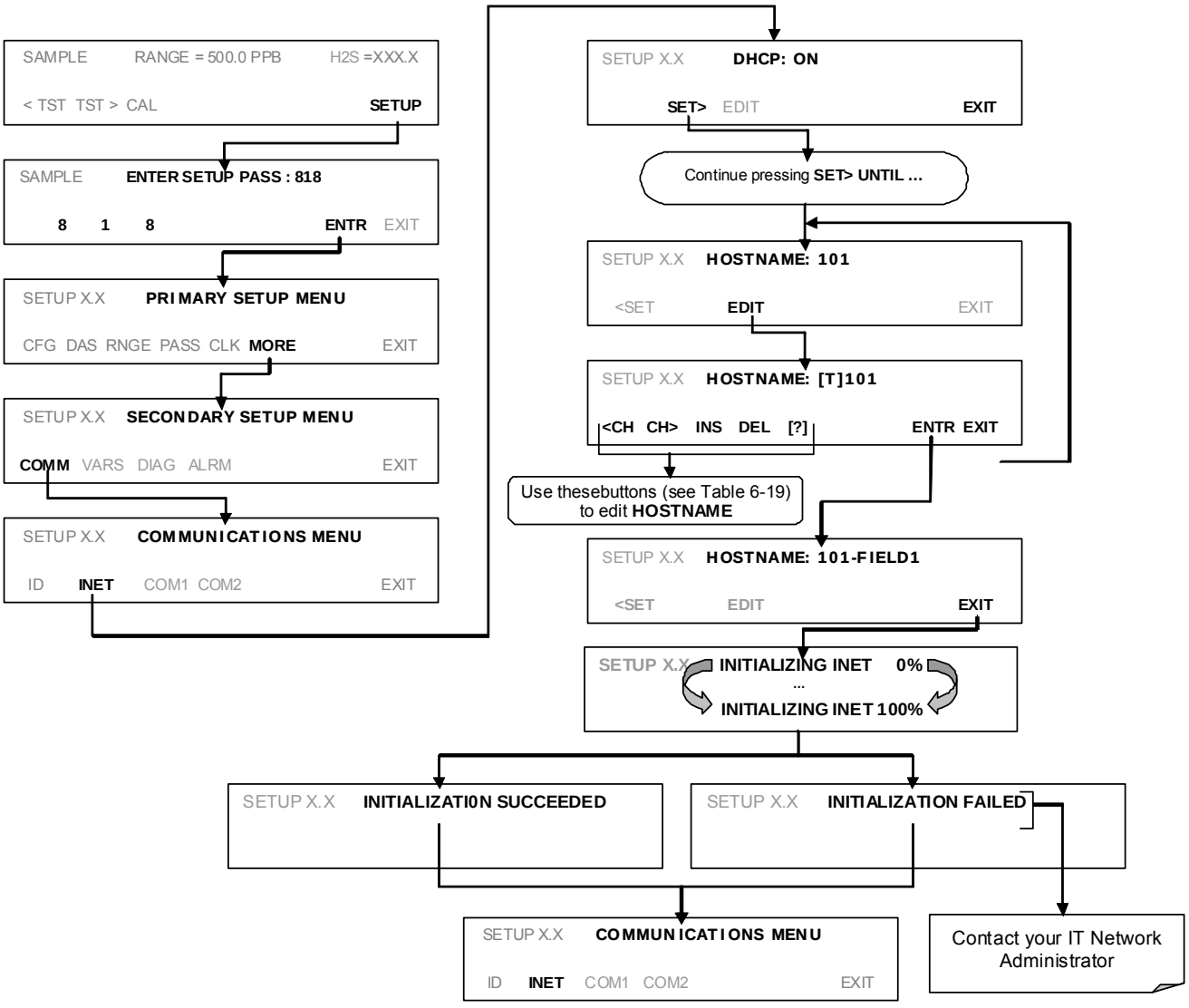

Table 4-18. Internet Configuration Touchscreen Button Functions

BUTTON	FUNCTION
<CH	Moves the cursor one character to the left.
CH>	Moves the cursor one character to the right.
INS	Inserts a character before the cursor location.
DEL	Deletes a character at the cursor location.
[?]	Press this key to cycle through the range of numerals and characters available for insertion. 0-9, A-Z, space ’ ~ ! © # $ % ^ & * ( ) - _ = +[ ] { } < >\ | ; : , . / ?
ENTR	Accepts the new setting and returns to the previous menu.
EXIT	Ignores the new setting and returns to the previous menu.
Some buttons only appear when applicable/usable.	

4.7.7. USB CONFIGURATION

The analyzer can be operated through a personal computer by downloading the TAPI USB driver and directly connecting their respective USB ports.

1. Install the Teledyne T-Series USB driver on your computer, downloadable from the Teledyne API website under Help Center>Software Downloads (www.teledyne-api.com/software).
2. Run the installer file: "TAPIVCPInstaller.exe"

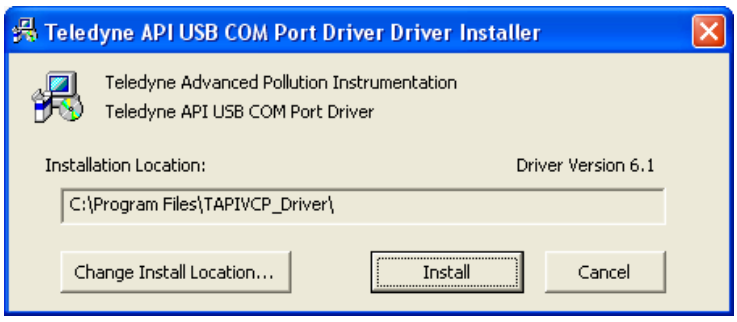

3. Connect the USB cable between the USB ports on your personal computer and your analyzer. The USB cable should be a Type A – Type B cable, commonly used as a USB printer cable.
4. Determine the Windows XP Com Port number that was automatically assigned to the USB connection. (Start → Control Panel → System → Hardware → Device Manager). This is the com port that should be set in the communications software, such as APIcom or Hyperterminal.

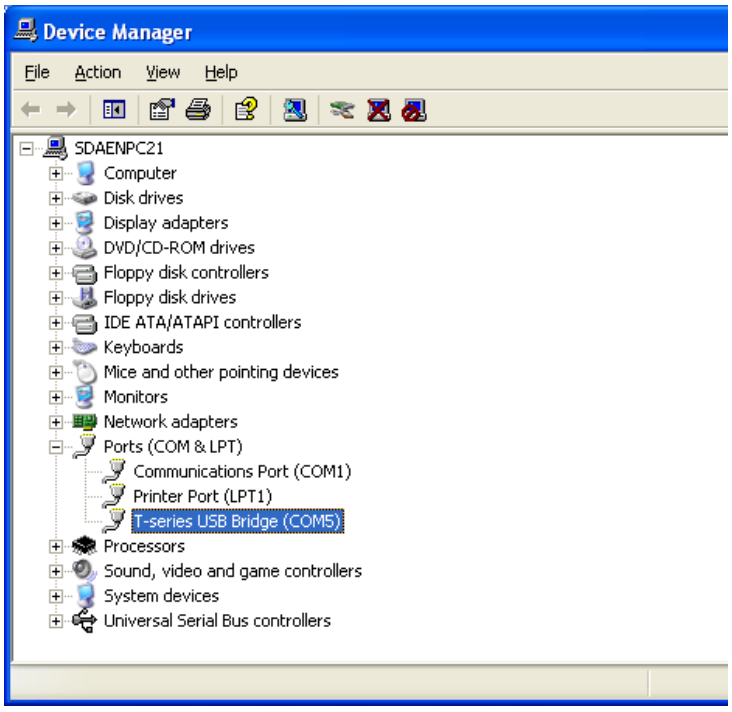

Refer to the Quick Start (*Direct Cable Connection*) section of the Teledyne APIcom Manual, PN 07463.

5. In the instrument's SETUP>MORE>COMM>COM2 menu, make the following settings:

   Baud Rate: 115200
   COM2 Mode Settings:

Quiet Mode	ON
Computer Mode	ON
MODBUS RTU	OFF
MODBUS ASCII	OFF
E,8,1 MODE	OFF
E,7,1 MODE	OFF
RS-485 MODE	OFF
SECURITY MODE	OFF
MULTIDROP MODE	OFF
ENABLE MODEM	OFF
ERROR CHECKING	ON
XON/XOFF HANDSHAKE	OFF
HARDWARE HANDSHAKE	OFF
HARDWARE FIFO	ON
COMMAND PROMPT	OFF

6. Next, configure your communications software, such as APIcom. Use the COM port determined in Step 4 and the baud rate set in Step 5. The figures below show how these parameters would be configured in the Instrument Properties window in APIcom when configuring a new instrument. See the APIcom manual (PN 07463) for more details.

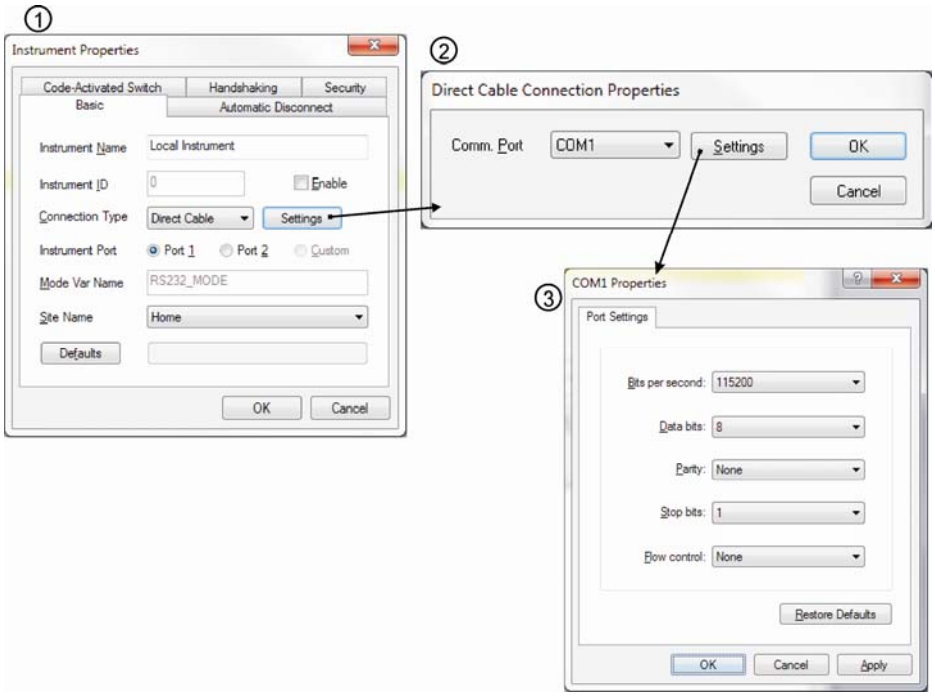

NOTE

USB configuration requires that the baud rates of the instrument and the PC match; check the PC baud rate and change if needed.

Using the USB port disallows use of the rear panel COM2 port except for multidrop communication.

After connecting a USB cable between your PC and the instrument, ensure their baud rates match (change the baud rate setting for either your PC's software or the instrument). The baud rate setting is in the Communications Menu under COM2, which is the default setup menu for USB configuration.

Also, while there are various communication modes available (Table 4-18), the default settings are recommended for USB, except to change the baud rate if required..

4.7.8. MULTIDROP RS-232 SET UP

When the RS-232 Multidrop option is installed, connection adjustments and configuration through the menu system are required. This section provides instructions for the internal connection adjustments, then for external connections, and ends with instructions for menu-driven configuration.

NOTE

Because the RS-232 Multidrop option uses both the RS232 and COM2 DB9 connectors on the analyzer's rear panel to connect the chain of instruments, COM2 port is no longer available for separate RS-232 or RS-485 operation.

CAUTION

Printed Circuit Assemblies (PCAs) are sensitive to electro-static discharges too small to be felt by the human nervous system. Failure to use ESD protection when working with electronic assemblies will void the instrument warranty. Refer to Section 13 for more information on preventing ESD damage..

In each instrument with the Multidrop option there is a shunt jumpering two pins on the serial Multidrop and LVDS printed circuit assembly (PCA), as shown in Figure 4-9. This shunt must be removed from all instruments except that designated as last in the multidrop chain, which must remain terminated. This requires powering off and opening each instrument and making the following adjustments:

1. With **NO power** to the instrument, remove its top cover and lay the rear panel open for access to the Multidrop/LVDS PCA, which is seated on the CPU.
2. On the Multidrop/LVDS PCA's JP2 connector, remove the shunt that jumpers Pins 21 ↔ 22 as indicated in Figure 4-9. (Do this for all but the last instrument in the chain where the shunt should remain at Pins 21 ↔ 22).
3. Check that the following cable connections are made in *all* instruments (again refer to Figure 4-9):
   - J3 on the Multidrop/LVDS PCA to the CPU's COM1 connector
     (Note that the CPU's COM2 connector is not used in Multidrop)
   - J4 on the Multidrop/LVDS PCA to J12 on the motherboard
   - J1 on the Multidrop/LVDS PCS to the front panel LCD

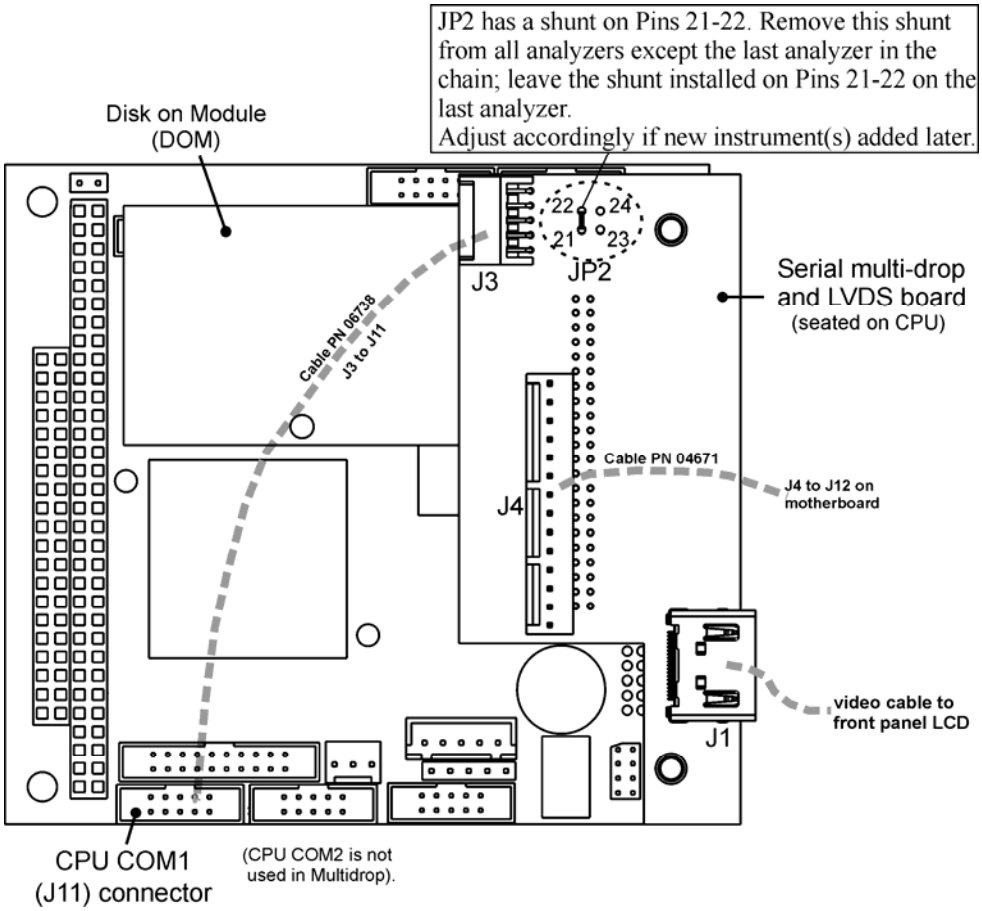

Figure 4-9. Jumper and Cables for Multidrop Mode

Note
If you are adding an instrument to the end of a previously configured chain, remove the shunt between Pins 21 ↔ 22 of JP2 on the Multidrop/LVDS PCA in the instrument that was previously the last instrument in the chain.

4. Close the instrument.
5. Referring to Figure 4-10 use straight-through DB9 male → DB9 female cables to interconnect the host RS232 port to the first analyzer's RS232 port; then from the first analyzer's COM2 port to the second analyzer's RS232 port; from the second analyzer's COM2 port to the third analyzer's RS232 port, etc., connecting in this fashion up to eight analyzers, subject to the distance limitations of the RS-232 standard.
6. On the rear panel of each analyzer, adjust the DCE DTE switch so that the green and the red LEDs (RX and TX) of the COM1 connector (labeled RS232) are both lit. (Ensure you are using the correct RS-232 cables internally wired specifically for RS-232 communication; see Table 1-1, "Communication Cables" and the preceding subsection, "RS-232 Connection").

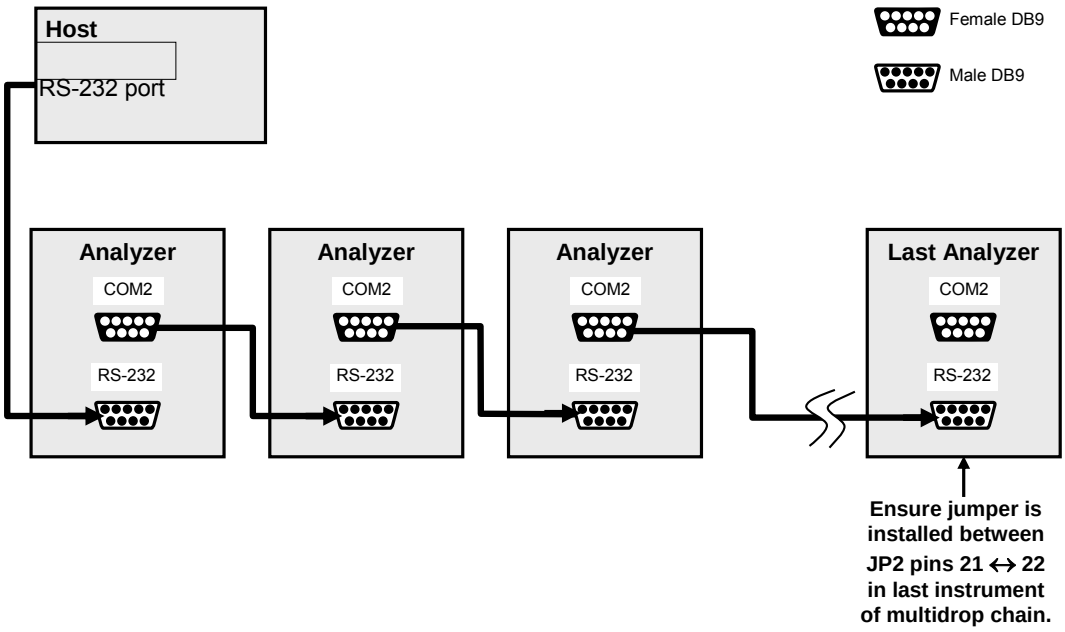

Figure 4-10.Multidrop PCA Host/Analyzer Interconnect Diagram

7. BEFORE communicating from the host, power on the instruments and check that the Instrument ID code is unique for each (see Section 4.7.1).
   a. In the SETUP Mode menu go to SETUP>MORE>COMM>ID. The default ID is typically the model number or "0".

   b. To change the identification number, press the button below the digit to be changed.

   c. Press/select ENTER to accept the new ID for that instrument.

8. Next, in the SETUP>MORE>COMM>COM1 menu (do not use the COM2 menu for multidrop), edit the COM1 MODE parameter as follows: press/select EDIT and set only QUIET MODE, COMPUTER MODE, and MULTIDROP MODE to ON. Do not change any other settings.
9. Press/select ENTER to accept the changed settings, and ensure that COM1 MODE now shows 35.
10. Press/select SET> to go to the COM1 BAUD RATE menu and ensure it reads the same for all instruments (edit as needed so that all instruments are set at the same baud rate).

Note
Teledyne API recommends setting up the first link between the Host and the first analyzer and testing it before setting up the rest of the chain.

The (communication) Host instrument can address only one instrument at a time, each by its unique ID (see step 7 above).

4.7.9. MODBUS SET UP

The following set of instructions assumes that the user is familiar with MODBUS communications, and provides minimal information to get started. For additional instruction, please refer to the Teledyne API MODBUS manual, PN 06276. Also refer to www.modbus.org for MODBUS communication protocols.

Minimum Requirements

- Instrument firmware with MODBUS capabilities installed.
- MODBUS-compatible software (TAPI uses MODBUS Poll for testing; see www.modbustools.com)
- Personal computer
- Communications cable (Ethernet or USB or RS232)
- Possibly a null modem adapter or cable

Actions

Set Com Mode parameters Comm	Ethernet: Using the front panel menu, go to SETUP – MORE – COMM – INET; scroll through the INET submenu until you reach TCP PORT 2 (the standard setting is 502), then continue to TCP PORT 2 MODBUS TCP/IP; press EDIT and toggle the menu button to change the setting to ON, then press ENTR. (Change Machine ID if needed: see "Slave ID"). USB/RS232: Using the front panel menu, go to SETUP – MORE – COMM – COM2 – EDIT; scroll through the COM2 EDIT submenu until the display shows COM2 MODBUS RTU: OFF (press OFF to change the setting to ON. Scroll NEXT to COM2 MODBUS ASCII and ensure it is set to OFF. Press ENTR to keep the new settings. (If RTU is not available with your communications equipment, set the COM2 MODBUS ASCII setting to ON and ensure that COM2 MODBUS RTU is set to OFF. Press ENTR to keep the new settings).
Slave ID	If your analyzer is connected to a network with at least one other analyzer of the same model, a unique Slave ID must be assigned to each. Using the front panel menu, go to SETUP – MORE – COMM – ID. The MACHINE ID default is the same as the model number. Toggle the menu buttons to change the ID.
Reboot analyzer	For the settings to take effect, power down the analyzer, wait 5 seconds, and power up the analyzer.
Make appropriate cable connections	Connect your analyzer either: • via its Ethernet or USB port to a PC (this may require a USB-to-RS232 adapter for your PC; if so, also install the sofware driver from the CD supplied with the adapter, and reboot the computer if required), or • via its COM2 port to a null modem (this may require a null modem adapter or cable).
Specify MODBUS software settings (examples used here are for MODBUS Poll software)	1. Click Setup / [Read / Write Definition] /. a. In the Read/Write Definition window (see example that follows) select a **Function** (what you wish to read from the analyzer). b. Input **Quantity** (based on your firware's register map). c. In the View section of the Read/Write Definition window select a **Display** (typically Float Inverse). d. Click **OK**. 2. Next, click Connection/Connect. a. In the Connection Setup window (see example that follows), select the options based on your computer. b. Press **OK**.
Read the Modbus Poll Register	Use the Register Map to find the test parameter names for the values displayed (see example that follows If desired, assign an alias for each.

Example Read/Write Definition window:

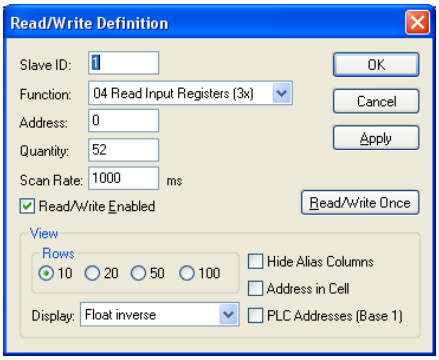

Example Connection Setup window:

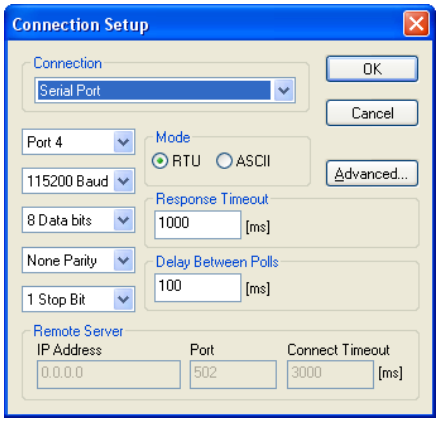

Example MODBUS Poll window:

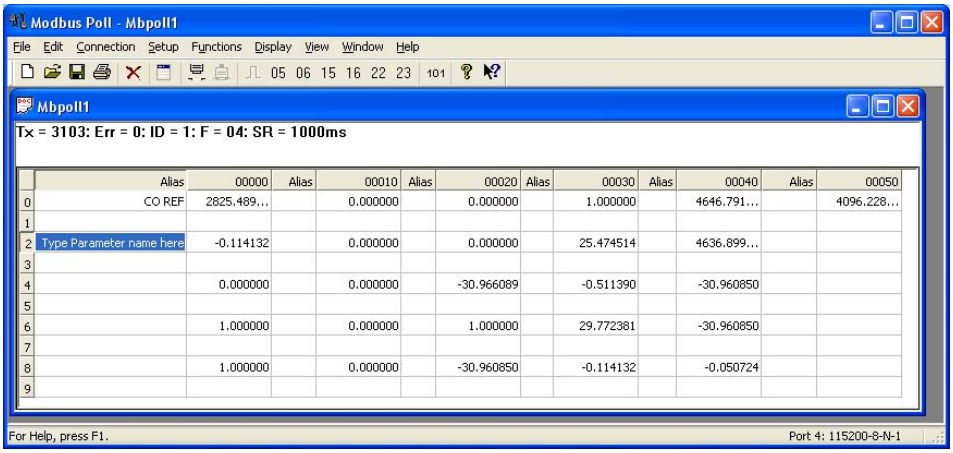

4.7.10. COM PORT COMMUNICATION MODES

Each of the analyzer's serial ports can be configured to operate in a number of different modes, which are listed in Table 4-18 and which can be combined by adding the Mode ID numbers. For example, quiet mode, computer mode and internet-enabled mode would carry a combined mode ID of 1, the standard configuration on the T101 COM2 port. Note that each COM port needs to be configured independently.

Table 4-19. COMM Port Communication Modes

MODE[1]	ID	DESCRIPTION
QUIET	**1**	Quiet mode suppresses any feedback from the analyzer (DAS reports, and warning messages) to the remote device and is typically used when the port is communicating with a computer program such as APICOM. Such feedback is still available but a command must be issued to receive them.
COMPUTER	**2**	Computer mode inhibits echoing of typed characters and is used when the port is communicating with a computer program, such as APICOM.
SECURITY	**4**	When enabled, the serial port requires a password before it will respond. The only command that is active is the help screen (? CR).
HESSEN PROTOCOL	**16**	The Hessen communications protocol is used in some European countries. Teledyne API part number 02252 contains more information on this protocol.
E, 7, 1	**2048**	When turned on this mode switches the **COMM** port settings from No parity; 8 data bits; 1 stop bit to Even parity; 7 data bits; 1 stop bit
RS-485	**1024**	Configures the **COM2** Port for RS-485 communication. RS-485 mode has precedence over Multidrop mode if both are enabled.
MULTIDROP PROTOCOL	**32**	Multidrop protocol allows a multi-instrument configuration on a single communications channel. Multidrop requires the use of instrument IDs.
ENABLE MODEM	**64**	Enables to send a modem initialization string at power-up. Asserts certain lines in the RS-232 port to enable the modem to communicate.
ERROR CHECKING[2]	**128**	Fixes certain types of parity errors at certain Hessen protocol installations.
XON/XOFF HANDSHAKE[2]	**256**	Disables XON/XOFF data flow control also known as software handshaking.
HARDWARE HANDSHAKE	**8**	Enables CTS/RTS style hardwired transmission handshaking. This style of data transmission handshaking is commonly used with modems or terminal emulation protocols as well as by Teledyne API's APICOM software.
HARDWARE FIFO[2]	**512**	Improves data transfer rate when on of the COMM ports.
COMMAND PROMPT	**4096**	Enables a command prompt when in terminal mode.

[1] Modes are listed in the order in which they appear in the **SETUP** → **MORE** → **COMM** → **COM[1 OR 2]** → **MODE** menu

[2] The default sting for this feature is **ON.** Do not disable unless instructed to by Teledyne API Technical Support personnel.

Press the following buttons to select a communication mode for a one of the COMM Ports, such as the following example where **HESSEN PROTOCOL** mode is enabled:

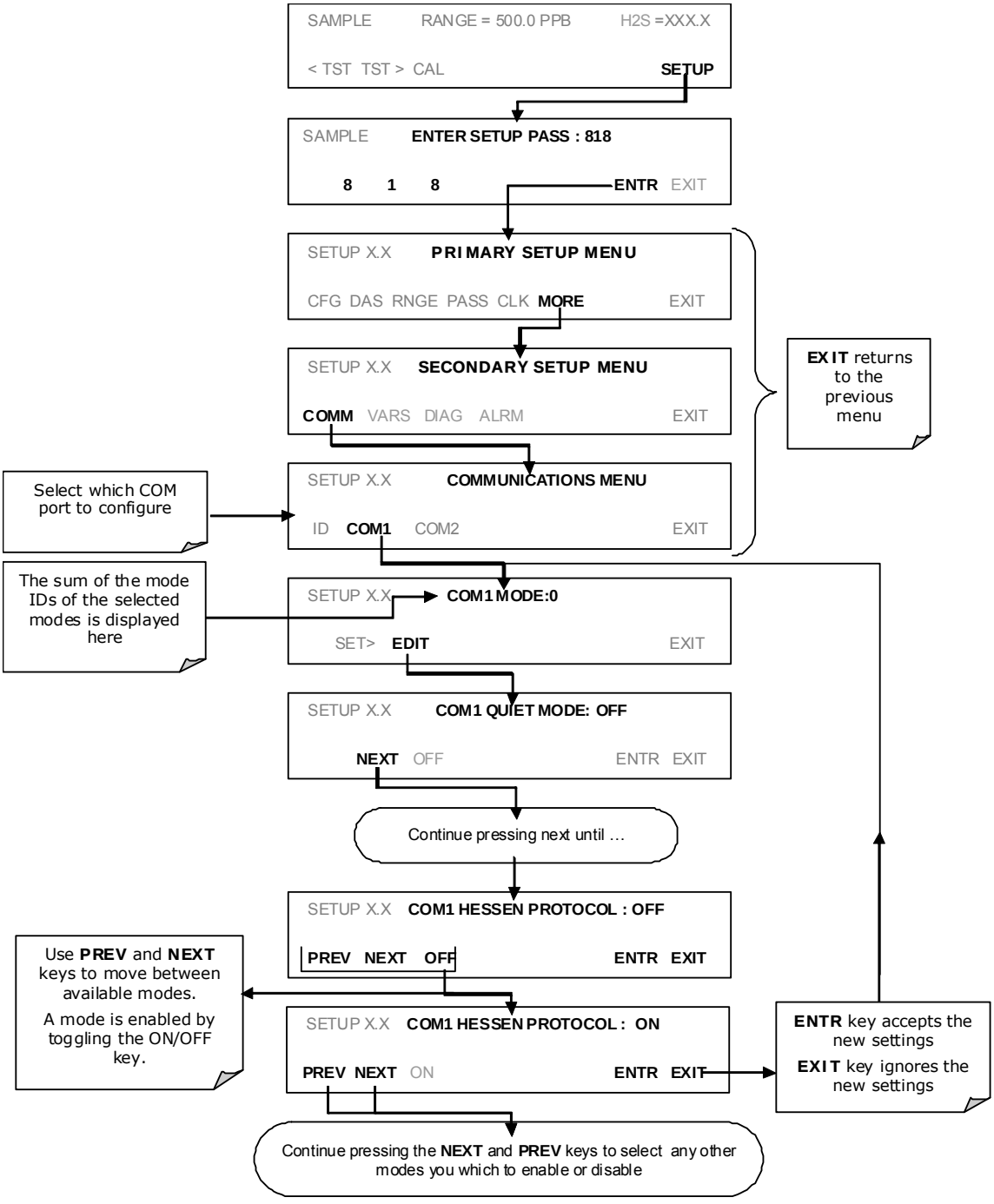

4.7.11. COM PORT BAUD RATE

To select the baud rate of one of the COM Ports, press:

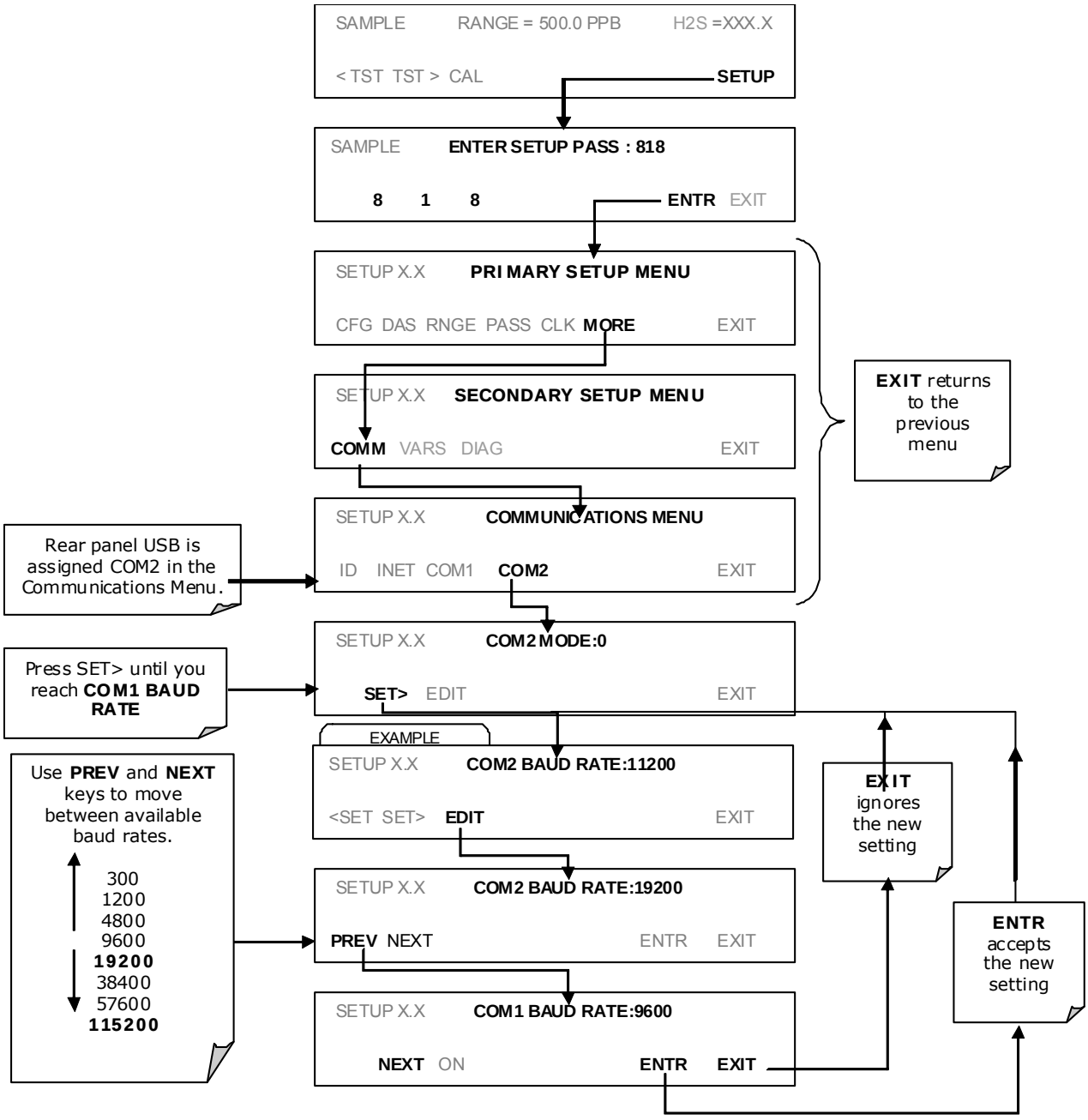

4.7.12. COM PORT TESTING

The serial ports can be tested for correct connection and output in the COMM menu. This test sends a string of 256 'w' characters to the selected COM port. While the test is running, the red LED on the rear panel of the analyzer should flicker.

To initiate the test press the following button sequence .

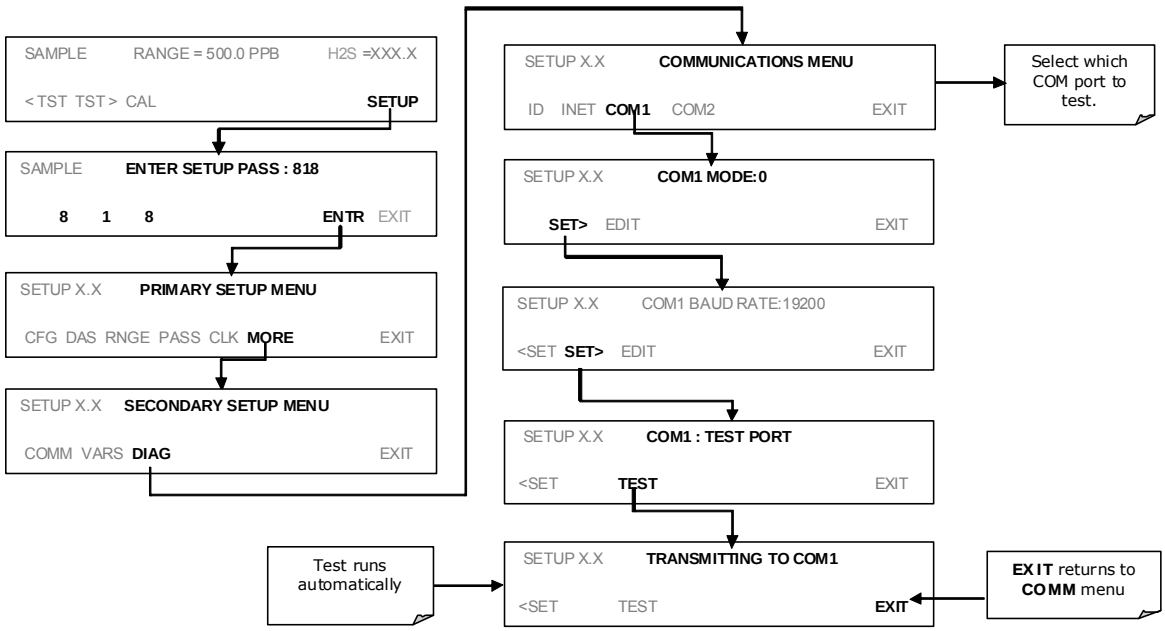

4.8. USING THE DATA ACQUISITION SYSTEM (DAS)

The T101 analyzer contains a flexible and powerful, internal data acquisition system (DAS) that enables the analyzer to store concentration and calibration data as well as a host of diagnostic parameters. The DAS of the T101 can store several months of data, depending on how it is configured. The data are stored in non-volatile memory and are retained even when the instrument is powered off. Data are stored in plain text format for easy retrieval and use in common data analysis programs (such as spreadsheet-type programs).

The DAS is designed to be flexible, users have full control over the type, length and reporting time of the data. The DAS permits users to access stored data through the instrument's front panel or its communication ports. Using APICOM, data can even be retrieved automatically to a remote computer for further processing.

The principal use of the DAS is logging data for trend analysis and predictive diagnostics, which can assist in identifying possible problems before they affect the functionality of the analyzer. The secondary use is for data analysis, documentation and archival in electronic format.

To support the DAS functionality, Teledyne API offers APICOM, a program that provides a visual interface for remote or local setup, configuration and data retrieval of

the DAS (Section 4.8). The APICOM manual, which is included with the program, contains a more detailed description of the DAS structure and configuration, which is briefly described in this section.

The T101 is configured with a basic DAS configuration, which is enabled by default. New data channels are also enabled by default but each channel may be turned off for later or occasional use. Note that DAS operation is suspended while its configuration is edited through the front panel. To prevent such data loss, it is recommended to use the APICOM graphical user interface for DAS changes.

The green SAMPLE LED on the instrument front panel, which indicates the analyzer status, also indicates certain aspects of the DAS status:

Table 4-20. Front Panel LED Status Indicators for DAS

LED STATE	DAS STATUS
Off	System is in calibration mode. Data logging can be enabled or disabled for this mode. Calibration data are typically stored at the end of calibration periods, concentration data are typically not sampled, diagnostic data should be collected.
Blinking	Instrument is in hold-off mode, a short period after the system exits calibrations. DAS channels can be enabled or disabled for this period. Concentration data are typically disabled whereas diagnostic should be collected.
On	Sampling normally.

The DAS can be disabled only by disabling or deleting its individual data channels.

4.8.1. DAS STRUCTURE

The DAS is designed around the feature of a "record". A record is a single data point of one parameter, stored in one (or more) data channels and generated by one of several triggering event. The entire DAS configuration is stored in a script, which can be edited from the front panel or downloaded, edited and uploaded to the instrument in form of a string of plain-text lines through the communication ports.

DAS data are defined by the PARAMETER type and are stored through different triggering EVENTS in data CHANNELS, which relate triggering events to data parameters and define certain operational functions related to the recording and reporting of the data.

4.8.1.1. DAS Channels

The key to the flexibility of the DAS is its ability to store a large number of combinations of triggering events and data parameters in the form of data channels. Users may create up to 20 data channels and each channel can contain one or more parameters. For each channel one triggering event is selected and up to 50 data parameters, which can be the same or different between channels. Each data channel has several properties that define the structure of the channel and allow the user to make operational decisions regarding the channel (Table 4-20).

Table 4-21. DAS Data Channel Properties

PROPERTY	DESCRIPTION	DEFAULT	SETTING RANGE
NAME	The name of the data channel.	"NONE"	Up to 6 letters and digits (more with APICOM, but only the first six are displayed on the front panel).
TRIGGERING EVENT	The event that triggers the data channel to measure and store its data parameters. See APPENDIX A-5 for a list of available triggering events.	ATIMER	Any allowed event.
NUMBER AND LIST OF PARAMETERS	A User-configurable list of data types to be recorded in any given channel. See APPENDIX A-5 for a list of available parameters	1 - PMTDET	Any available concentration, temperature, pneumatic or diagnostic parameter.
REPORT PERIOD	The amount of time between each channel data point.	000:01:00	000:00:01 to 366:23:59 (Days:Hours:Minutes)
NUMBER OF RECORDS	The number of reports that will be stored in the data file. Once the specified limit has been exceeded, the oldest data are over-written to make space for new data.	100	Configuration-dependent, limited by available storage space.
RS-232 REPORT	Enables the analyzer to automatically report channel values to the RS-232 ports.	OFF	OFF or ON
CHANNEL ENABLED	Enables or disables the channel. Provides a convenient means to temporarily disable a data channel.	ON	OFF or ON
CAL HOLD OFF	Disables sampling of data parameters while instrument is in calibration mode. Note that - when enabled here - there is also a length of the DAS HOLD OFF after calibration mode, which is set in the VARS menu (Section 4.11.2.11.)	OFF	OFF or ON

4.8.1.2. DAS Parameters

Data parameters are types of data that may be measured and stored by the DAS . For each Teledyne API analyzer model, the list of available data parameters is different, fully defined and not customizable. Appendix A-5 lists firmware specific data parameters for the T101. The most common parameters are concentrations of measured gases (H_2S, H_2S and NO_2), temperatures of heated zones (converter, sample chamber, box temperature…), pressures and flows of the pneumatic subsystem and other diagnostic measurements as well as calibration data (slope and offset) for each gas.

Most data parameters have associated measurement units, such as mV, ppb, cm^3/min, etc., although some parameters have no units. The only units that can be changed are those of the concentration readings according to the SETUP-RANGE settings. Note that the DAS does not keep track of the unit of each concentration value and DAS data files may contain concentrations in multiple units if the unit was changed during data acquisition.

Each data parameter has user-configurable functions that define how the data are recorded (Table 4-21).

Table 4-22. DAS Data Parameter Functions

FUNCTION	EFFECT
PARAMETER	Instrument-specific parameter name.
SAMPLE MODE	**INST**: Records instantaneous reading. **AVG**: Records average reading during reporting interval. **MIN**: Records minimum (instantaneous) reading during reporting interval. **MAX**: Records maximum (instantaneous) reading during reporting interval.
PRECISION	Decimal precision of parameter value (0-4).
STORE NUM. SAMPLES	**OFF**: stores only the average (default). **ON**: stores the average and the number of samples in each average for a parameter. This property is only useful when the **AVG** sample mode is used. Note that the number of samples is the same for all parameters in one channel and needs to be specified only for one of the parameters in that channel.

4.8.1.3. DAS Configuration Limits

Users can specify up to 50 parameters per data channel (the T101 provides about 30 parameters). However, the number of DAS objects are limited by the instrument's finite storage capacity. For information regarding the maximum number of channels, parameters, and records and how to calculate the file size for each data channel, refer to the DAS manual downloadable from the TAPI website at http://www.teledyne-api.com/manuals/ under Special Manuals.

4.8.1.4. DAS Triggering Events

Triggering events define when and how the DAS records a measurement of any given data channel. Triggering events are firmware-specific and are listed in Appendix A. The most common triggering events are:

- **ATIMER**: Sampling at regular intervals specified by an automatic timer. Most trending information is usually stored at such regular intervals, which can be instantaneous or averaged.

- **EXITZR**, **EXITSP**, **SLPCHG** (exit zero, exit span, slope change): Sampling at the end of (irregularly occurring) calibrations or when the response slope changes. These triggering events create instantaneous data points, e.g., for the new slope and offset (concentration response) values at the end of a calibration. Zero and slope values are valuable to monitor response drift and to document when the instrument was calibrated.

- **WARNINGS**: Some data may be useful when stored if one of several warning messages appears. This is helpful for trouble-shooting by monitoring when a particular warning occurred.

4.8.2. DEFAULT DAS CHANNELS

A set of default Data Channels has been included in the analyzer's software for logging H_2S concentration and certain predictive diagnostic data. These default channels include but are not limited to:

CONC: Samples H_2S concentration at one minute intervals and stores an average every hour with a time and date stamp. Readings during calibration and calibration hold off are not included in the data. By default, the last 800 hourly averages are stored.

PNUMTC: Collects sample flow and sample pressure data at five minute intervals and stores an average once a day with a time and date stamp. This data is useful for monitoring the condition of the pump and critical flow orifice (sample flow) and the sample filter (clogging indicated by a drop in sample pressure) over time to predict when maintenance will be required. The last 360 daily averages (about 1 year) are stored.

CALDAT: Logs new slope and offset every time a zero or span calibration is performed. This Data Channel also records the instrument reading just prior to performing a calibration. ***Note:*** this Data Channel collects data based on an event (a calibration) rather than a timer. This Data Channel will store data from the last 200 calibrations. This does not represent any specific length of time since it is dependent on how often calibrations are performed. As with all Data Channels, a time and date stamp is recorded for every data point logged.

The Channel Properties. Triggering Events and Data Parameters/Functions for these default channels are:

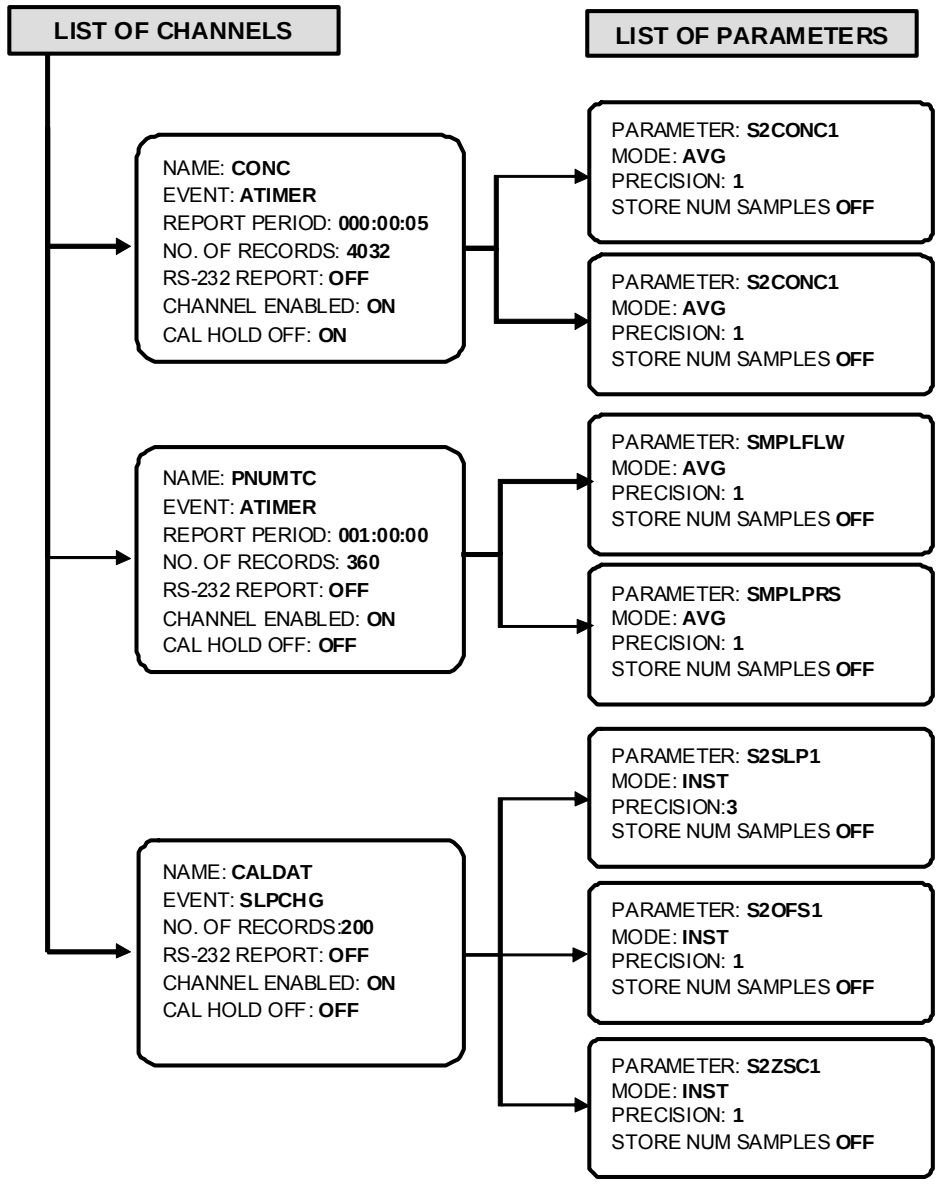

Figure 4-11. Default DAS Channels Setup

These default Data Channels can be used as they are, or they can be customized from the front panel to fit a specific application. They can also be deleted to make room for custom user-programmed Data Channels.

Appendix A-5 lists the firmware-specific DAS configuration in plain-text format. This text file can either be loaded into APICOM and then modified and uploaded to the instrument or can be copied and pasted into a terminal program to be sent to the analyzer.

NOTE
Sending an DAS configuration to the analyzer through its COM ports will replace the existing configuration and will delete all stored data. Back up any existing data and the DAS configuration before uploading new settings.

4.8.2.1. Viewing DAS Data and Settings

DAS data and settings can be viewed on the front panel through the following keystroke sequence.

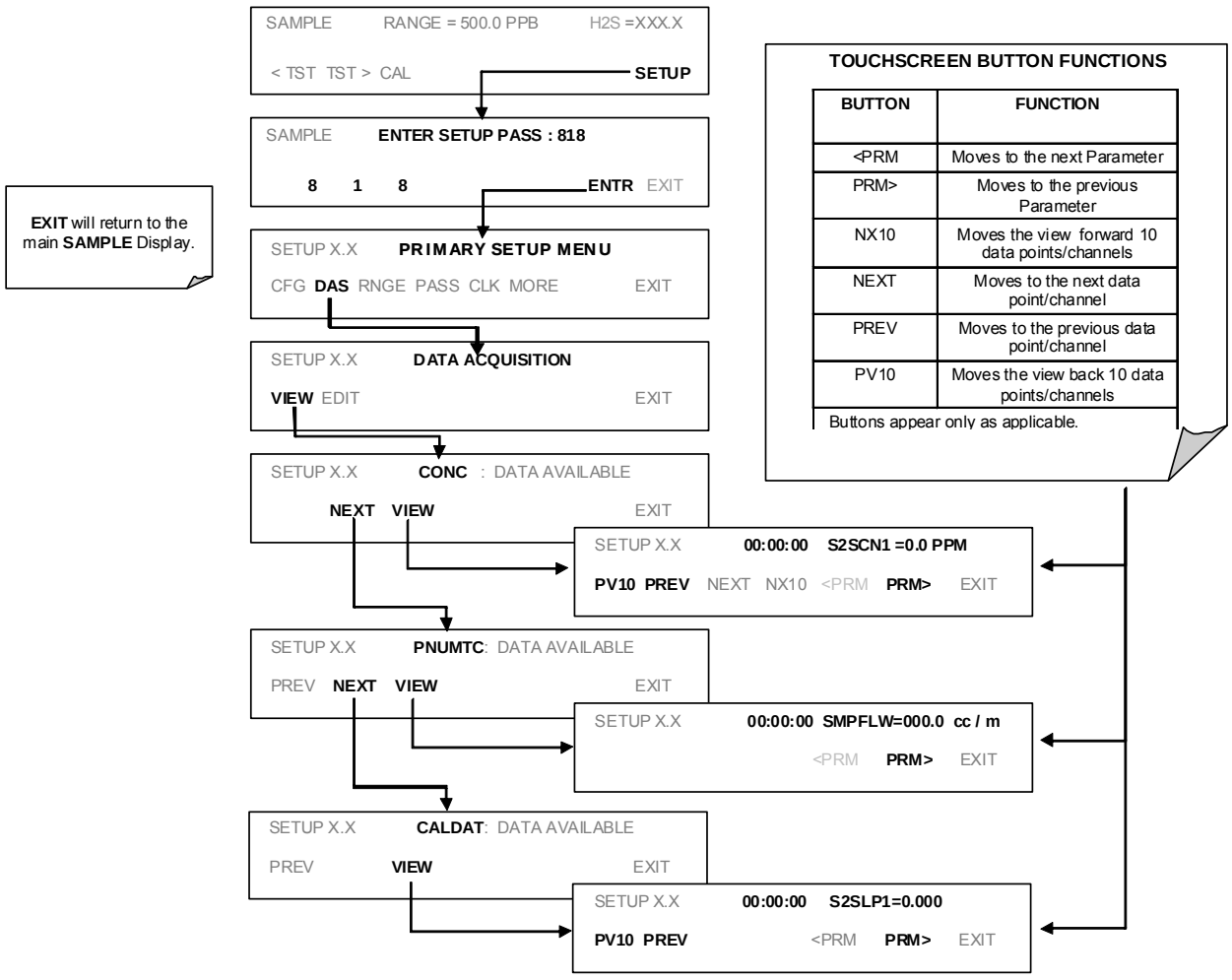

4.8.2.2. Editing DAS Data Channels

DAS configuration is most conveniently done through the APICOM remote control program. The following list of key strokes shows how to edit using the front panel.

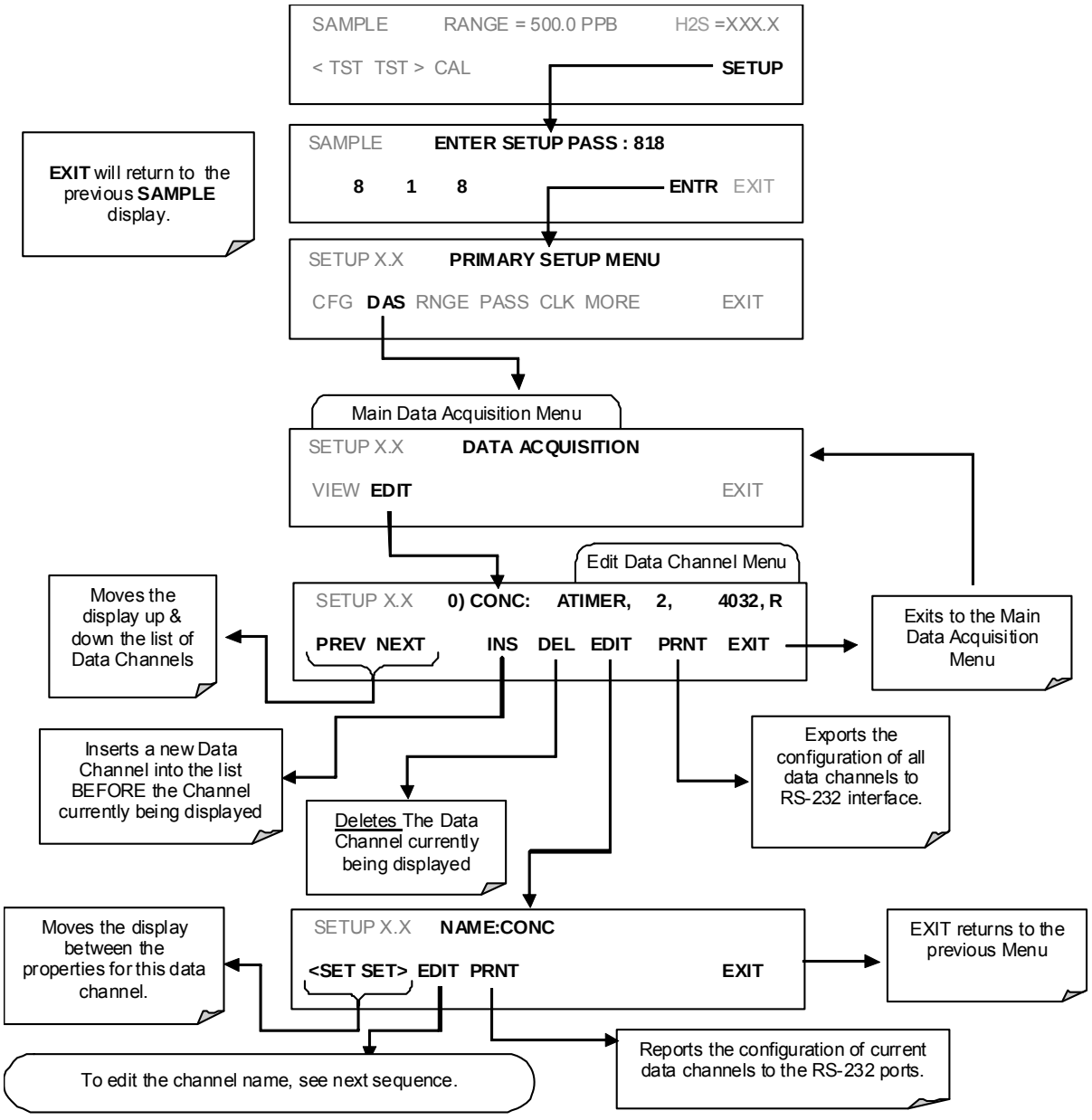

When editing the data channels, the top line of the display indicates some of the configuration parameters. For example, the display line:

0) CONC: ATIMER, 4, 800

translates to the following configuration:

Channel No.: 0
NAME: CONC
TRIGGER EVENT: ATIMER

PARAMETERS: Four parameters are included in this channel
EVENT: This channel is set up to record 800 data points.

To edit the name of a data channel, follow the above button sequence and then press:

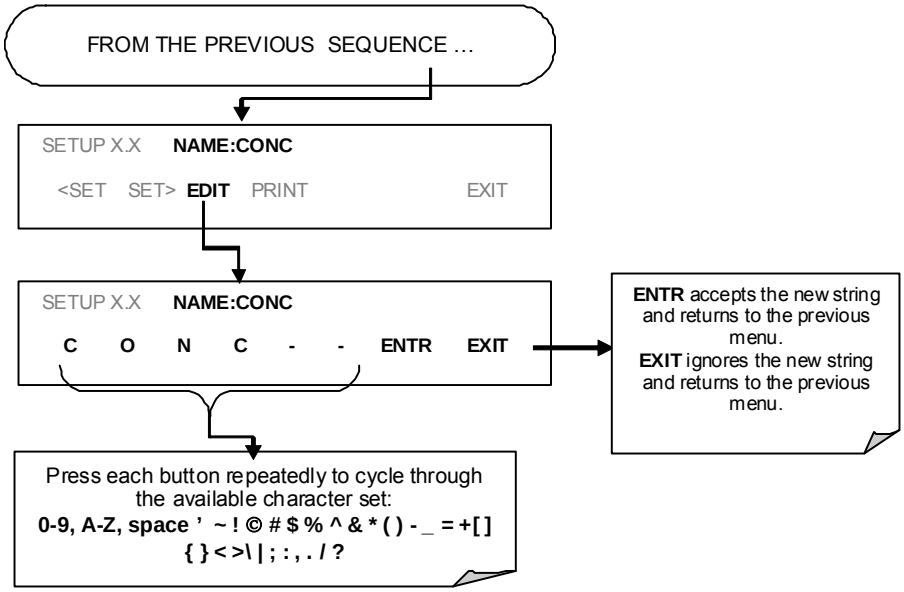

4.8.2.3. Trigger Events

To edit the list of data parameters associated with a specific data channel, press:

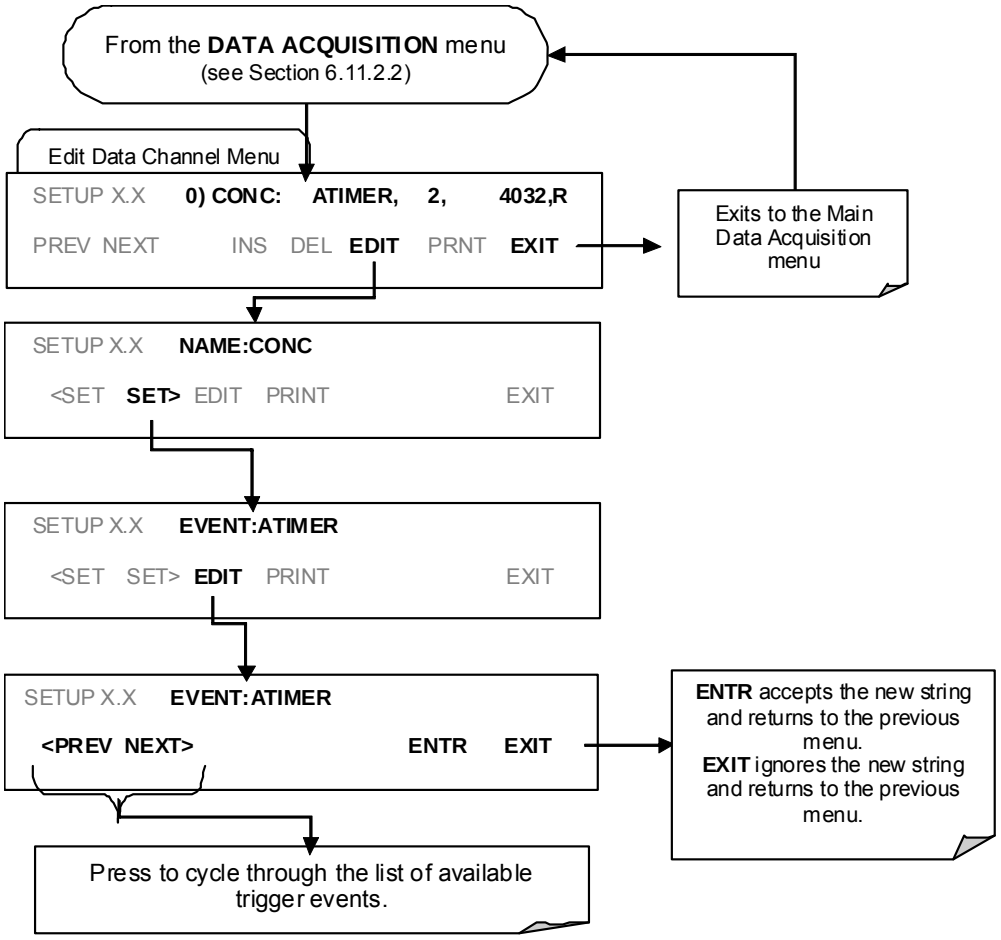

4.8.2.4. Editing DAS Parameters

Data channels can be edited individually from the front panel without affecting other data channels. However, when editing a data channel, such as during adding, deleting or editing parameters, all data for that particular channel will be lost, because the DAS can store only data of one format (number of parameter columns etc.) for any given channel. In addition, an DAS configuration can only be uploaded remotely as an entire set of channels. Hence, remote update of the DAS will always delete all current channels and stored data.

To modify, add or delete a parameter, follow the instruction shown in Section 4.11.2.2 then press:

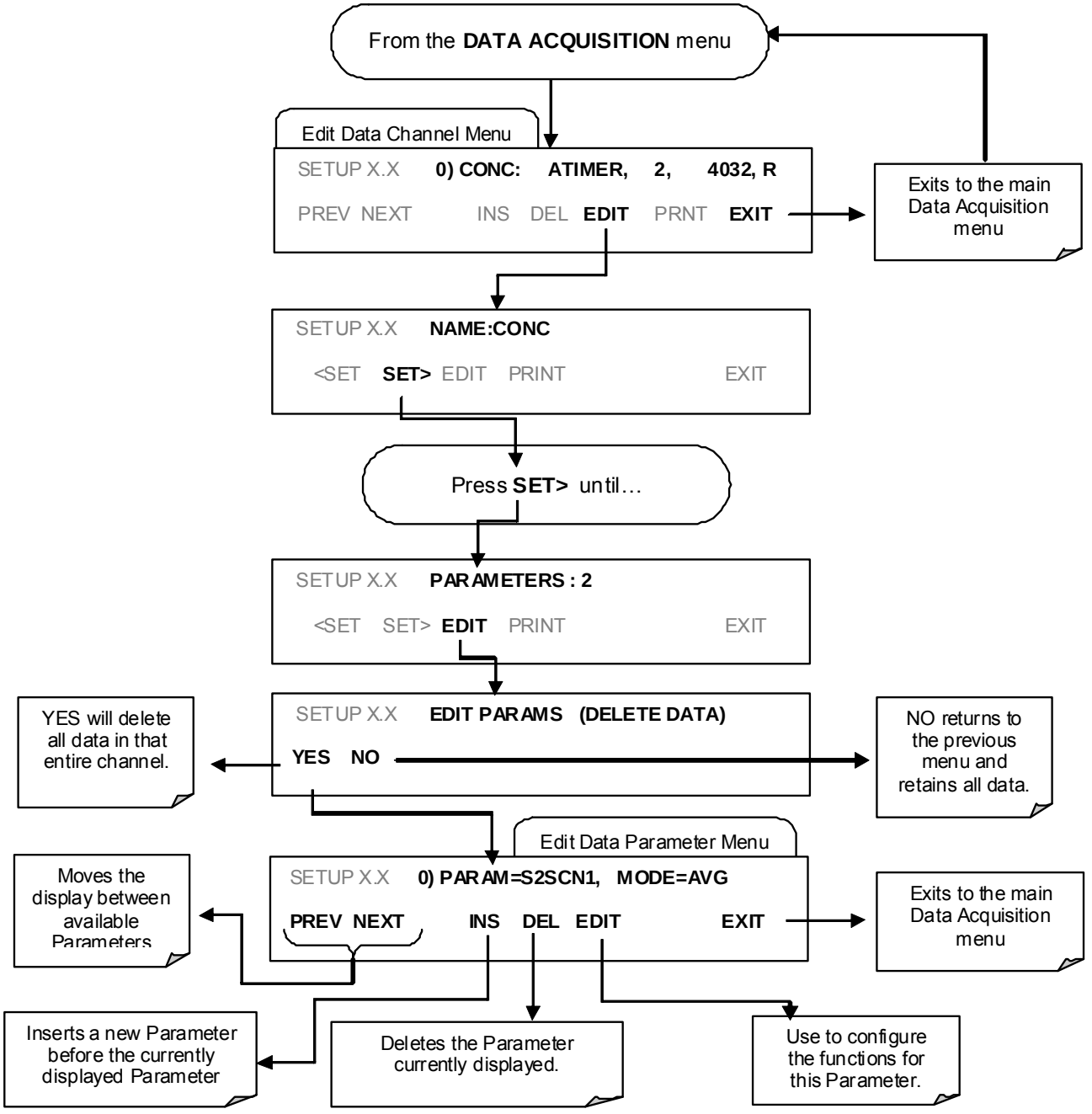

To configure the parameters for a specific data parameter, press:

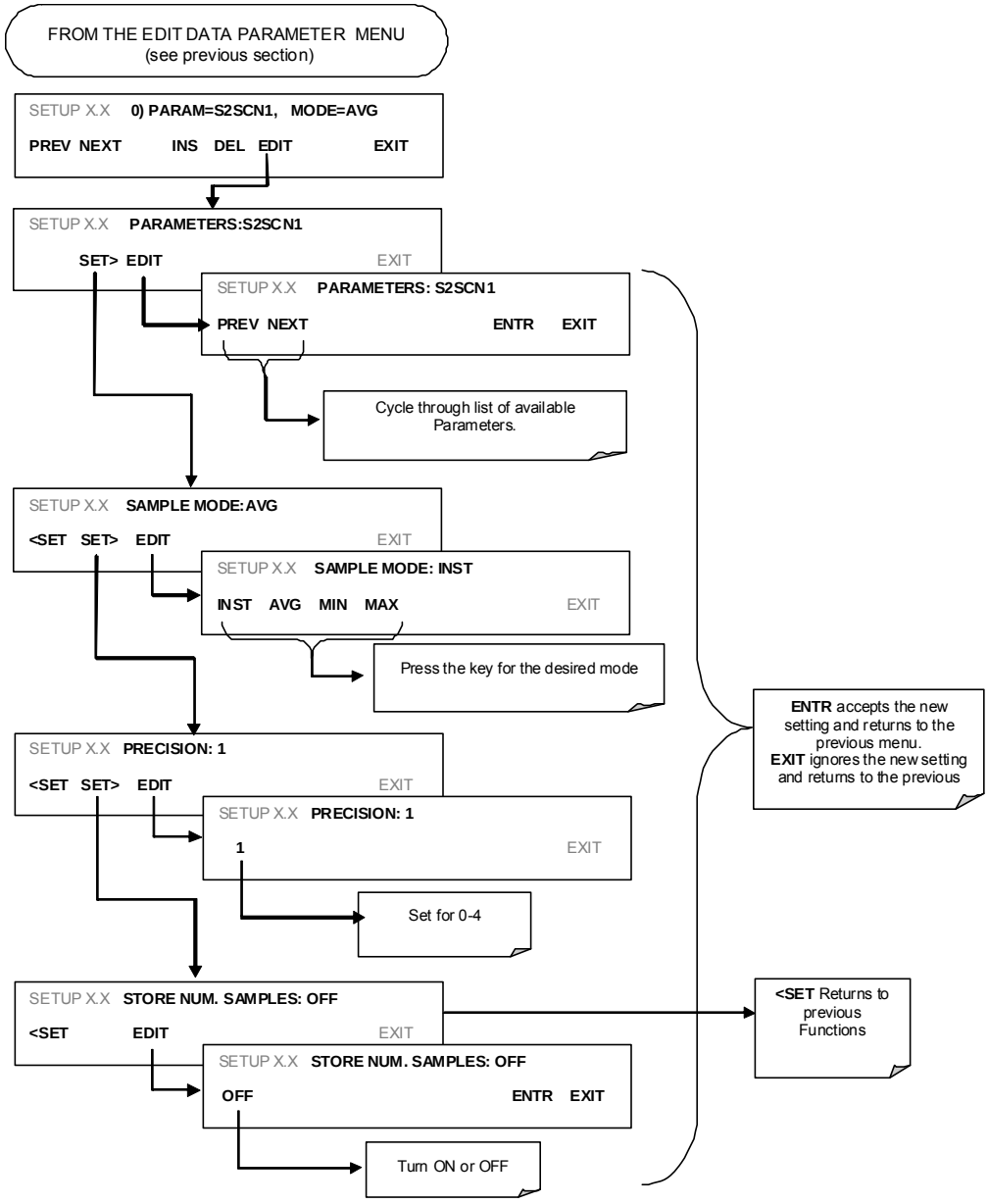

4.8.2.5. Sample Period and Report Period

The DAS defines two principal time periods by which sample readings are taken and permanently recorded:

SAMPLE PERIOD: Determines how often DAS temporarily records a sample reading of the parameter in volatile memory. The **SAMPLE PERIOD** is set to one minute by default and generally cannot be accessed from the standard DAS front panel menu, but is available via the instrument's communication ports by using APICOM or the analyzer's standard serial data protocol.

SAMPLE PERIOD is only used when the DAS parameter's sample mode is set for **AVG, MIN** or **MAX**.

REPORT PERIOD: Sets how often the sample readings stored in volatile memory are processed, (e.g. average, minimum or maximum are calculated) and the results stored permanently in the instrument's Disk-on-module as well as transmitted via the analyzer's communication ports. The **REPORT PERIOD** may be set from the front panel.

If the **INST** sample mode is selected the instrument stores and reports an instantaneous reading of the selected parameter at the end of the chosen **REPORT PERIOD**

In **AVG, MIN** or **MAX** sample modes, the settings for the **SAMPLE PERIOD** and the **REPORT PERIOD** determine the number of data points used each time the average, minimum or maximum is calculated, stored and reported to the COMM ports. The actual sample readings are not stored past the end of the of the chosen **REPORT PERIOD**.

Also, the **SAMPLE PERIOD** and **REPORT PERIOD** intervals are synchronized to the beginning and end of the appropriate interval of the instrument's internal clock.

- If **SAMPLE PERIOD** were set for one minute the first reading would occur at the beginning of the next full minute according to the instrument's internal clock.
- If the **REPORT PERIOD** were set for of one hour the first report activity would occur at the beginning of the next full hour according to the instrument's internal clock.

EXAMPLE: Given the above settings, if DAS were activated at 7:57:35 the first sample would occur at 7:58 and the first report would be calculated at 8:00 consisting of data points for 7:58. 7:59 and 8:00.

During the next hour (from 8:01 to 9:00) the instrument will take a sample reading every minute and include 60 sample readings.

When the **STORE NUM. SAMPLES** feature is turned on the instrument will also store how many sample readings were used for the **AVG, MIN** or **MAX** calculation but not the readings themselves.

REPORT PERIODS IN PROGRESS WHEN INSTRUMENT IS POWERED OFF

If the instrument is powered off in the middle of a **REPORT PERIOD**, the samples accumulated so far during that period are lost. Once the instrument is turned back on, the DAS restarts taking samples and temporarily them in volatile memory as part of the **REPORT PERIOD** currently active at the time of restart. At the end of this **REPORT PERIOD** only the sample readings taken since the instrument was turned back on will be included in any **AVG**, **MIN** or **MAX** calculation. Also, the **STORE NUM. SAMPLES** feature will report the number of sample readings taken since the instrument was restarted.

To define the **REPORT PERIOD**, follow the instruction shown in Section 4.11.2.2 then press:

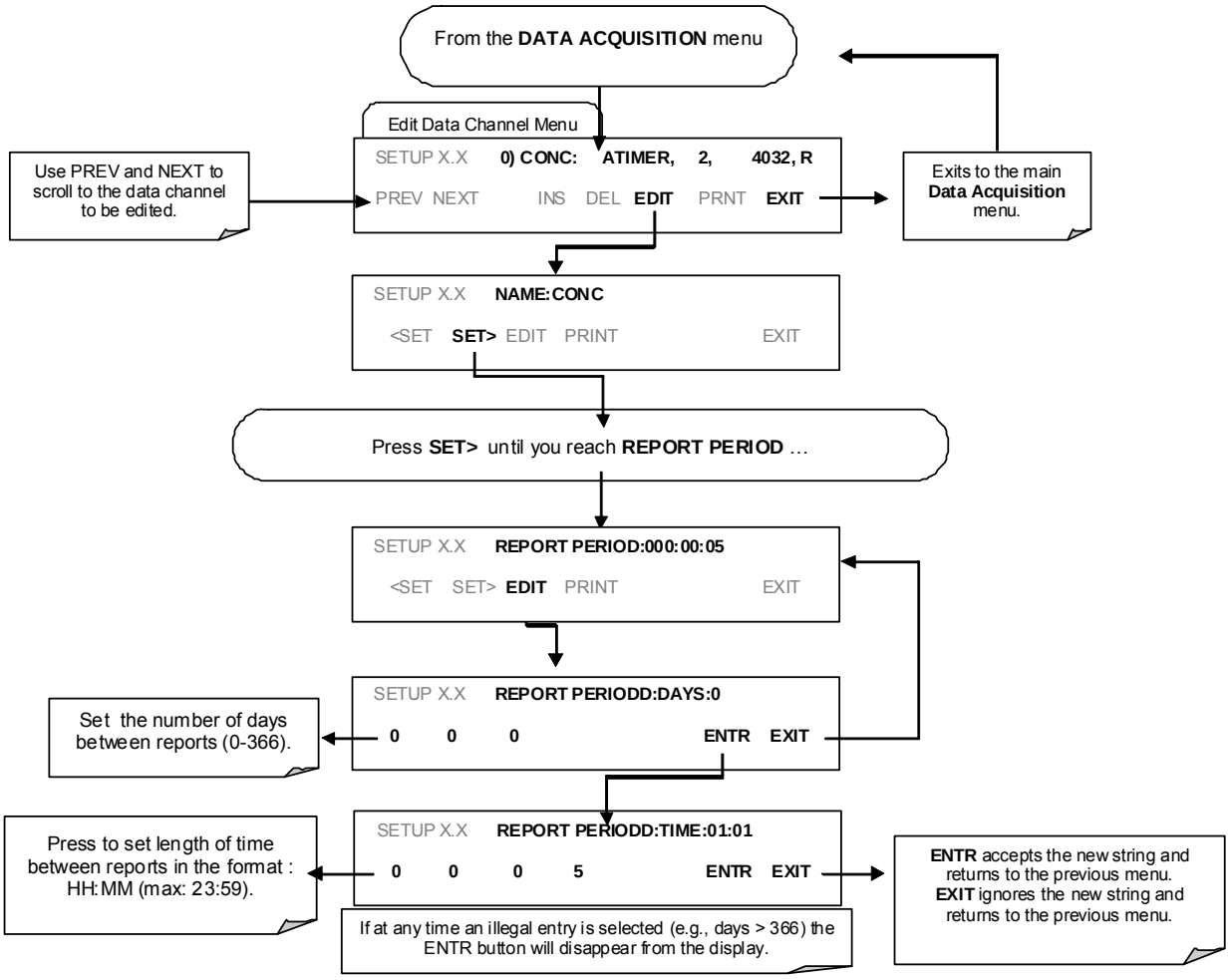

4.8.2.6. Number of Records

The number of data records in the DAS is cumulative across all channels and parameters, filling about one megabyte of space on the disk-on-module; this means that the actual number of records is limited by the total number of parameters and channels and other settings in the DAS configuration. Every additional data channel (up to 20), parameter (up to 50 per channel), number of samples setting etc. will govern the maximum amount of data points.

The DAS will check the amount of available data space and prevent the user from specifying too many records at any given point. If, for example, the DAS memory space can accommodate 375 more data records, the ENTR button will disappear when trying to specify more than that number of records. This check for memory space may also make an upload of a DAS configuration with APICOM or a Terminal program fail, if the

combined number of records would be exceeded. (For information regarding the maximum number of channels, parameters, and records and how to calculate the file size for each data channel, refer to the DAS manual downloadable from the TAPI website at http://www.teledyne-api.com/manuals/ under Special Manuals). To set the number of records for one channel from the front panel, press SETUP>DAS>EDIT>ENTR and the following button sequence:

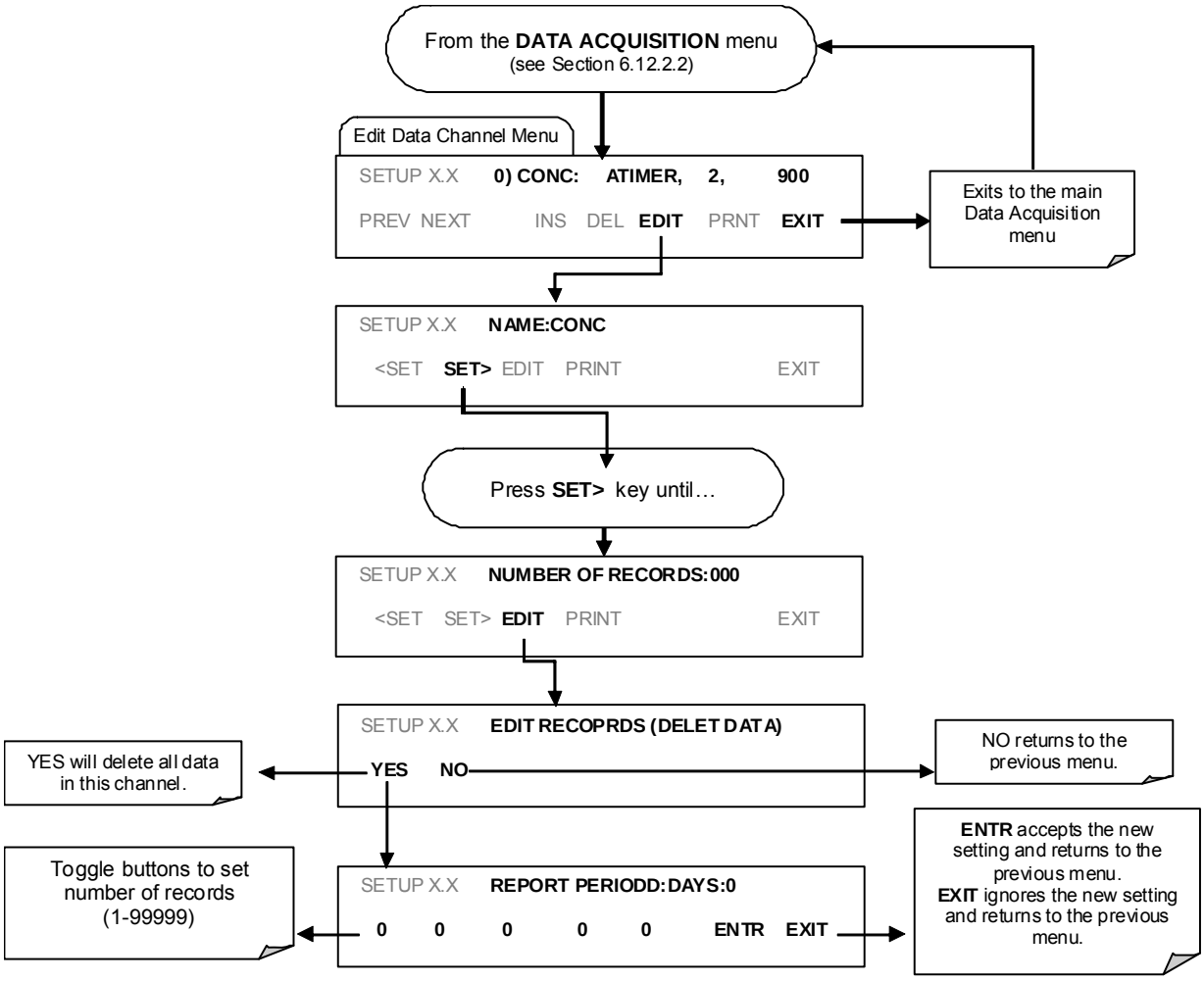

4.8.2.7. RS-232 Report Function

The T101 DAS can automatically report data to the communications ports, where they can be captured with a terminal emulation program or simply viewed by the user.

To enable automatic COM port reporting, follow the instruction shown in Section 4.11.2.2 then press:

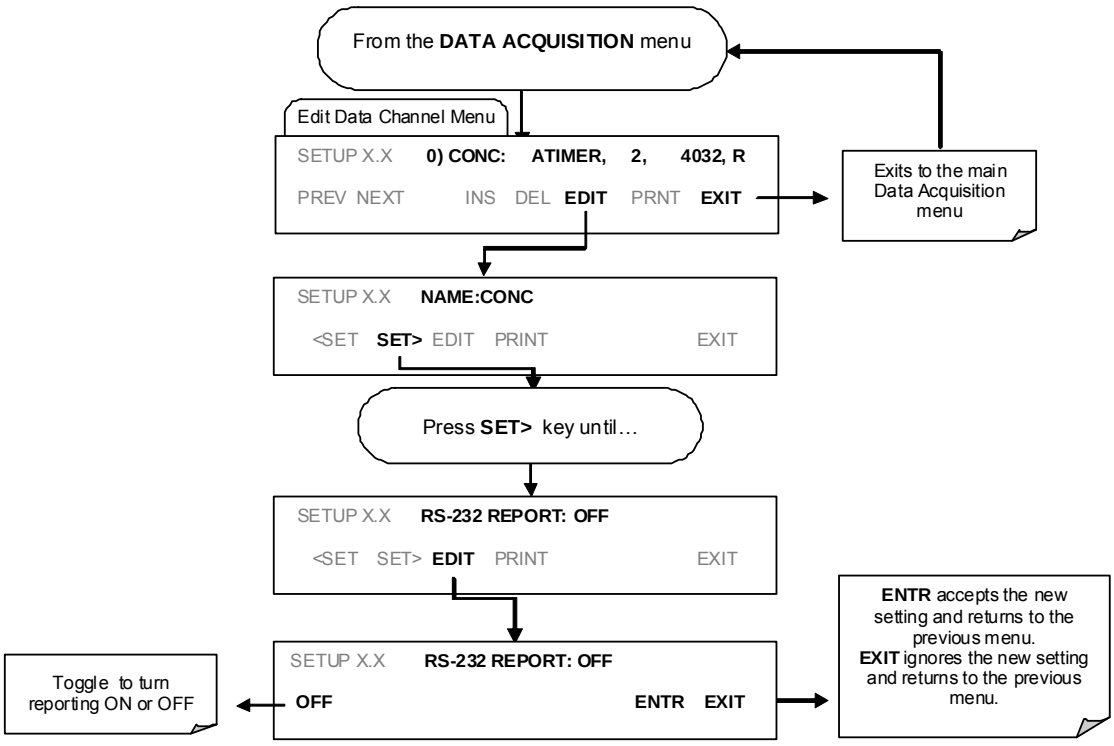

4.8.2.8. Compact Report

When enabled, this option avoids unnecessary line breaks on all RS-232 reports. Instead of reporting each parameter in one channel on a separate line, up to five parameters are reported in one line, instead.

4.8.2.9. Starting Date

This option allows specifying a starting date for any given channel in case the user wants to start data acquisition only after a certain time and date. If the **Starting Date** is in the past, the DAS ignores this setting.

4.8.2.10. Disabling/Enabling Data Channels

Data channels can be temporarily disabled, which can reduce the read/write wear on the disk-on-module . The ALL_01 channel of the T101, for example, is disabled by default.

To disable a data channel, follow the instruction shown in Section 4.11.2.2 then press:

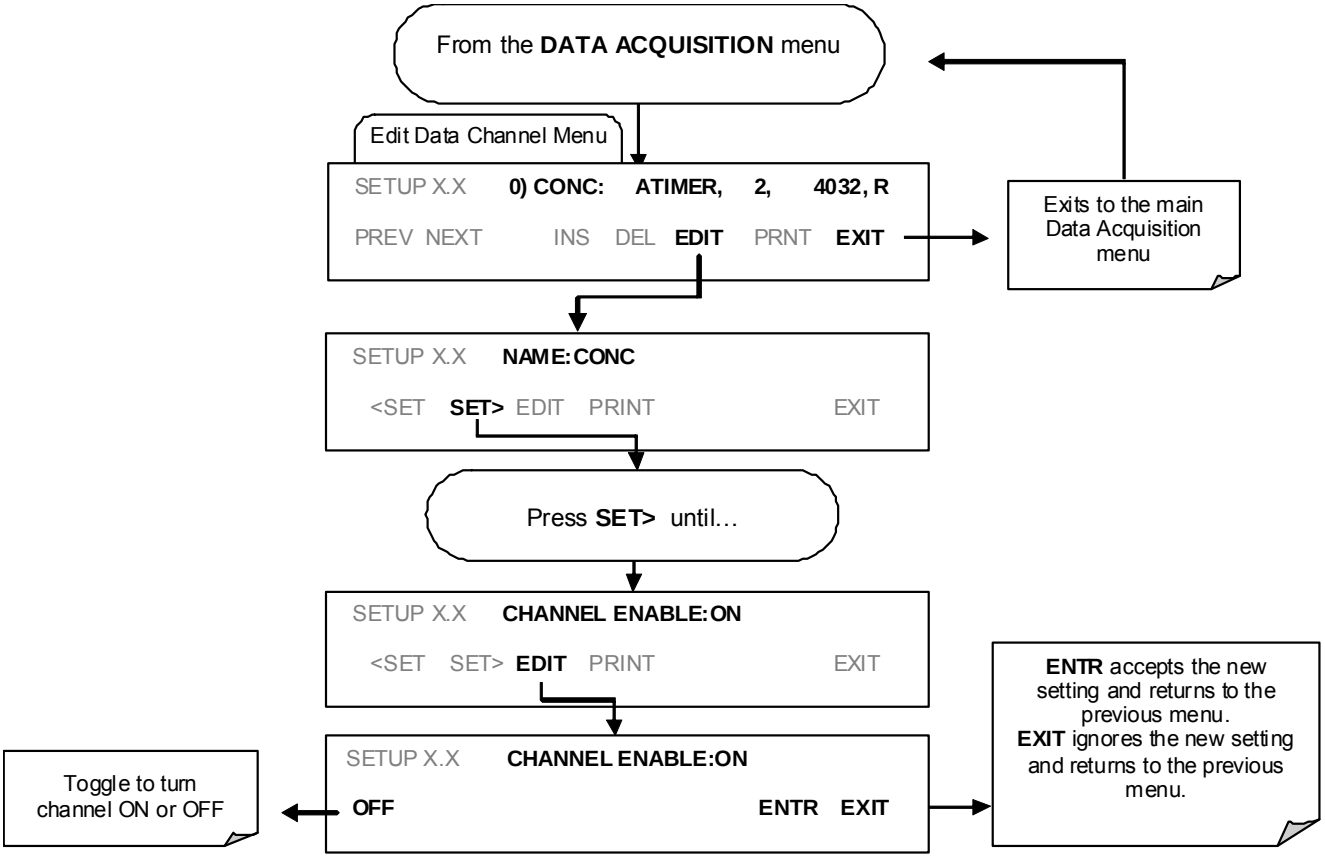

4.8.2.11. HOLDOFF Feature

The DAS HOLDOFF feature allows to prevent data collection during calibrations and during the DAS_HOLDOFF period enabled and specified in the VARS (Section 4.8). To enable or disable the HOLDOFF, follow the instruction shown in Section 4.11.2.2 then press:

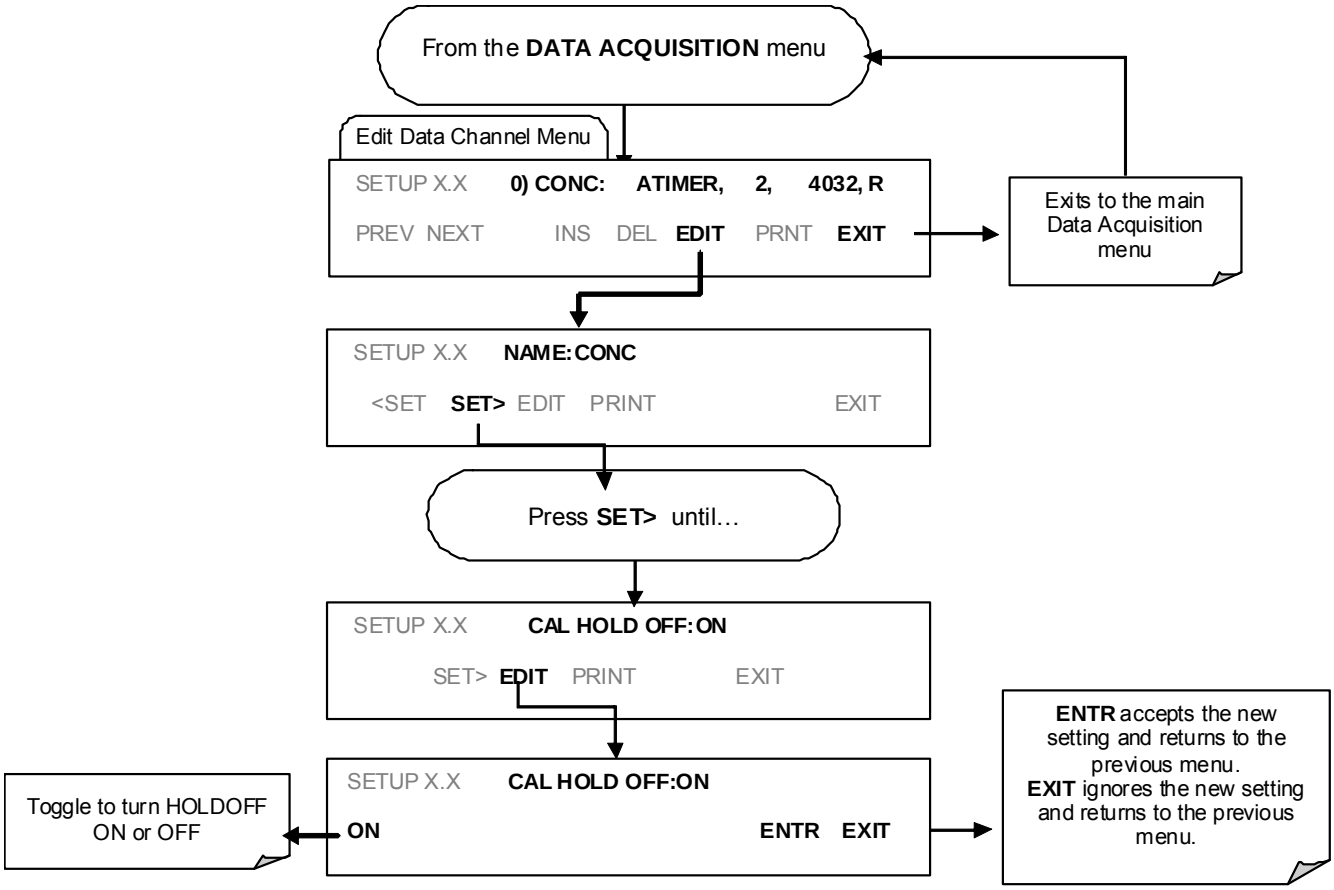

4.8.3. REMOTE DAS CONFIGURATION

Editing channels, parameters and triggering events as described in this section is can be performed via the APICOM remote control program using the graphic interface shown in Figure 4-15. Refer to the next Section 4.12 for details on remote access to the T101 analyzer.

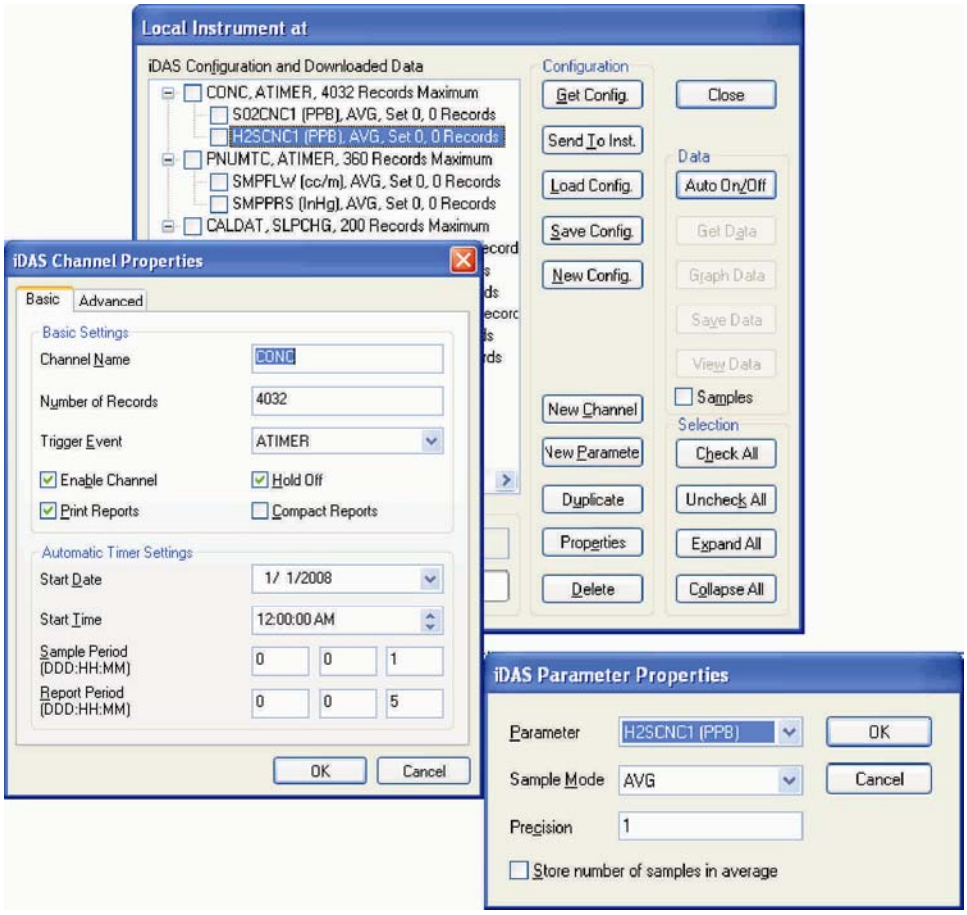

Figure 4-12. APICOM User Interface for Configuring the DAS

Once an DAS configuration is edited (which can be done offline and without interrupting DAS data collection), it is conveniently uploaded to the instrument and can be stored on a computer for later review, alteration or documentation and archival. Refer to the APICOM manual for details on these procedures. The APICOM user manual is included in the APICOM installation file, which can be downloaded at http://www.teledyne-api.com/software/apicom/.

CAUTION – Avoid losing data and saved configurations.
All data, parameters and channels will be replaced when uploading a DAS configuration script to the analyzer through its communication ports. Back up data and the original DAS configuration before attempting any DAS changes.

5. REMOTE OPERATION

5.1.1. REMOTE OPERATION USING THE EXTERNAL DIGITAL I/O

5.1.1.1. Status Outputs

The status outputs report analyzer conditions via optically isolated NPN transistors, which sink up to 50 mA of DC current. These outputs can be used interface with devices that accept logic-level digital inputs, such as programmable logic controllers (PLC's). Each Status bit is an open collector output that can withstand up to 40 VDC. All of the emitters of these transistors are tied together and available at D.

NOTE

Most PLC's have internal provisions for limiting the current that the input will draw from an external device. When connecting to a unit that does not have this feature, an external dropping resistor must be used to limit the current through the transistor output to less than 50 mA. At 50 mA, the transistor will drop approximately 1.2V from its collector to emitter.

The status outputs are accessed through a 12 pin connector on the analyzer's rear panel labeled STATUS (see Figure 5-1). The function of each pin is defined in Table 5–1.

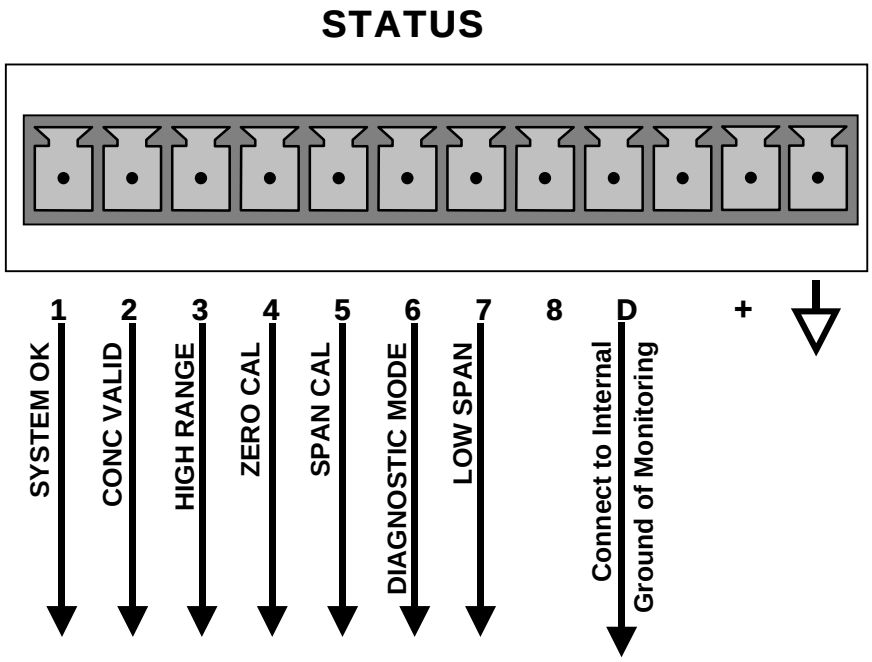

Figure 5-1. Status Output Connector

Table 5-1. Status Output Pin Assignments

CONNECTOR PIN	STATUS	CONDITION (ON=CONDUCTING)
1	System Ok	ON if no faults are present.
2	Conc Valid	ON if concentration measurement is valid, OFF when invalid.
3	High Range	ON if unit is in high range of any AUTO range mode.
4	Zero Cal	ON whenever the instrument is in ZERO calibration mode.
5	Span Cal	ON whenever the instrument is in SPAN calibration mode.
6	Diag Mode	ON whenever the instrument is in DIAGNOSTIC mode.
7	Low Range	ON if unit is in low range of any AUTO range mode.
8		Unused
D	Emitter Bus	The emitters of the transistors on pins 1-8 are bussed together. For most applications, this pin should be connected to the circuit ground of the receiving device.
+	Dc Power	+ 5 VDC source, 30 mA maximum (combined rating with Control Inputs)
⏚	Digital Ground	The ground from the analyzer's internal, 5/±15 VDC power supply.

5.1.1.2. Control Inputs

Control inputs allow the user to remotely initiate ZERO and SPAN calibration modes are provided through a 10-pin connector labeled CONTROL IN on the analyzer's rear panel. These are opto-isolated, digital inputs that are activated when a 5 VDC signal from the "U" pin is connected to the respective input pin.

Table 5-2. Control Input Pin Assignments

INPUT	STATUS	CONDITION WHEN ENABLED
A	External Zero Cal	Zero calibration mode is activated. The mode field of the display will read ZERO CAL R.
B	External Span Cal	Span calibration mode is activated. The mode field of the display will read SPAN CAL R.
C	External Low Span Cal	Low span (mid-point) calibration mode is activated. The mode field of the display will read LO CAL R.
D		Unused
E		Unused
F		Unused
⏚	Digital Ground	Provided to ground an external device (e.g., recorder).
U	DC Power For Input Pull Ups	Input for +5 VDC required to activate inputs A - F. This voltage can be taken from an external source or from the "+" pin.
+	Internal +5v Supply	Internal source of +5V which can be used to activate inputs when connected to pin U.

There are two methods to activate control inputs. The internal +5V available from the "+" pin is the most convenient method (Figure 4.18). However, to ensure that these inputs are truly isolated, a separate, external 5 VDC power supply should be used (Figure 4.19).

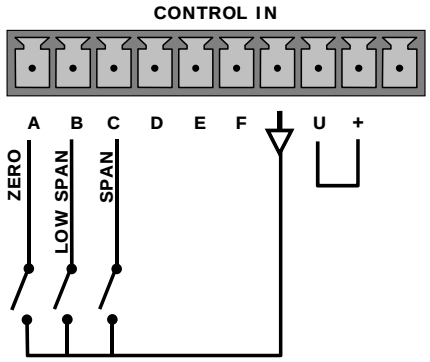

Figure 5-2. Control Inputs with Local 5 V Power Supply

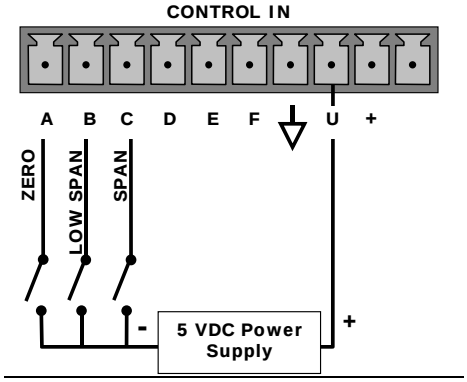

Figure 5-3.Control Inputs with External 5 V Power Supply

5.1.2. REMOTE OPERATION USING THE EXTERNAL SERIAL I/O

5.1.2.1. Terminal Operating Modes

The Model T101 can be remotely configured, calibrated or queried for stored data through the serial ports. As terminals and computers use different communication schemes, the analyzer supports two communicate modes specifically designed to interface with these two types of devices.

- **Computer mode** is used when the analyzer is connected to a computer with a dedicated interface program such as APICOM. More information regarding APICOM can be found in later in this section or on the Teledyne API website at http://www.teledyne-api.com/software/apicom/.

- **Interactive mode** is used with a terminal emulation programs such as HyperTerminal or a "dumb" computer terminal. The commands that are used to operate the analyzer in this mode are listed in Table 5-3.

5.1.2.2. Help Commands in Terminal Mode

Table 5-3. Terminal Mode Software Commands

COMMAND	Function
Control-T	Switches the analyzer to terminal mode (echo, edit). If mode flags 1 & 2 are OFF, the interface can be used in interactive mode with a terminal emulation program.
Control-C	Switches the analyzer to computer mode (no echo, no edit).
CR (carriage return)	A carriage return is required after each command line is typed into the terminal/computer. The command will not be sent to the analyzer to be executed until this is done. On personal computers, this is achieved by pressing the ENTER key.
BS (backspace)	Erases one character to the left of the cursor location.
ESC (escape)	Erases the entire command line.
? [ID] CR	This command prints a complete list of available commands along with the definitions of their functionality to the display device of the terminal or computer being used. The ID number of the analyzer is only necessary if multiple analyzers are on the same communications line, such as the multi-drop setup.
Control-C	Pauses the listing of commands.
Control-P	Restarts the listing of commands.

5.1.2.3. Command Syntax

Commands are not case-sensitive and all arguments within one command (i.e. ID numbers, keywords, data values, etc.) must be separated with a space character.

All Commands follow the syntax:

X [ID] COMMAND <CR>

Where

X is the command type (one letter) that defines the type of command. Allowed designators are listed in Table 4-25 and Appendix A-6.

[ID] is the analyzer identification number (Section 4.10.1.). Example: the Command "? 200" followed by a carriage return would print the list of available commands for the revision of software currently installed in the instrument assigned ID Number 200.

COMMAND is the command designator: This string is the name of the command being issued (LIST, ABORT, NAME, EXIT, etc.). Some commands may have additional arguments that define how the command is to be executed. Press ? <CR> or refer to Appendix A-6 for a list of available command designators.

<CR> is a carriage return. All commands must be terminated by a carriage return (usually achieved by pressing the ENTER key on a computer).

Table 5-4. Command Types

COMMAND	COMMAND TYPE
C	Calibration
D	Diagnostic
L	Logon
T	Test measurement
V	Variable
W	Warning

5.1.2.4. Data Types

Data types consist of integers, hexadecimal integers, floating-point numbers, Boolean expressions and text strings.

- Integer data are used to indicate integral quantities such as a number of records, a filter length, etc. They consist of an optional plus or minus sign, followed by one or more digits. For example, *+1*, *-12*, *123* are all valid integers.

- Hexadecimal integer data are used for the same purposes as integers. They consist of the two characters "0x," followed by one or more

hexadecimal digits (0-9, A-F, a-f), which is the 'C' programming language convention. No plus or minus sign is permitted. For example, *0x1*, *0x12*, *0x1234abcd* are all valid hexadecimal integers.

- Floating-point numbers are used to specify continuously variable values such as temperature set points, time intervals, warning limits, voltages, etc. They consist of an optional plus or minus sign, followed by zero or more digits, an optional decimal point, and zero or more digits. (At least one digit must appear before or after the decimal point.) Scientific notation is not permitted. For example, +1.0, 1234.5678, -0.1, 1 are all valid floating-point numbers.

- Boolean expressions are used to specify the value of variables or I/O signals that may assume only two values. They are denoted by the keywords ON and OFF.

- Text strings are used to represent data that cannot be easily represented by other data types, such as data channel names, which may contain letters and numbers. They consist of a quotation mark, followed by one or more printable characters, including spaces, letters, numbers, and symbols, and a final quotation mark. For example, "a", "1", "123abc", and "()[]<>" are all valid text strings. It is not possible to include a quotation mark character within a text string.

- Some commands allow you to access variables, messages, and other items, such as DAS data channels, by name. When using these commands, you must type the entire name of the item; you cannot abbreviate any names.

5.1.2.5. Status Reporting

Reporting of status messages as an audit trail is one of the three principal uses for the RS-232 interface (the other two being the command line interface for controlling the instrument and the download of data in electronic format). You can effectively disable the reporting feature by setting the interface to quiet mode (Section 4.10.8., Table 4-18).

Status reports include DAS data (when reporting is enabled), warning messages, calibration and diagnostic status messages. Refer to Appendix A-3 for a list of the possible messages, and this section for information on controlling the instrument through the RS-232 interface.

5.1.2.6. General Message Format

All messages from the instrument (including those in response to a command line request) are in the format:

X DDD:HH:MM [Id] MESSAGE<CRLF>

Where

X is a command type designator, a single character indicating the message type, as shown in the Table 4-25.

DDD:HH:MM is the time stamp, the date and time when the message was issued. It consists of the Day-of-year (DDD) as a number from 1 to 366, the hour of the day (HH) as a number from 00 to 23, and the minute (MM) as a number from 00 to 59.

[ID] is the analyzer ID, a number with 1 to 4 digits.

MESSAGE is the message content that may contain warning messages, test measurements, DAS reports, variable values, etc.

<CRLF> is a carriage return / line feed pair, which terminates the message.

The uniform nature of the output messages makes it easy for a host computer to parse them into an easy structure. Keep in mind that the front panel display does not give any information on the time a message was issued, hence it is useful to log such messages for trouble-shooting and reference purposes. Terminal emulation programs such as HyperTerminal can capture these messages to text files for later review.

5.1.2.7. Remote Access by Modem

The T101 can be connected to a modem for remote access. This requires a cable between the analyzer's COM port and the modem, typically a DB-9F to DB-25M cable (available from Teledyne API with part number WR0000024).

Once the cable has been connected, check to make sure the DTE-DCE is in the correct position. Also make sure the T101 COM port is set for a baud rate that is compatible with the modem, which needs to operate with an 8-bit word length with one stop bit.

The first step is to turn on the MODEM ENABLE communication mode (Mode 64, Section 4.10.8). Once this is completed, the appropriate setup command line for your modem can be entered into the analyzer. The default setting for this feature is

AT Y0 &D0 &H0 &I0 S0=2 &B0 &N6 &M0 E0 Q1 &W0

This string can be altered to match your modem's initialization and can be up to 100 characters long.

To change this setting press:

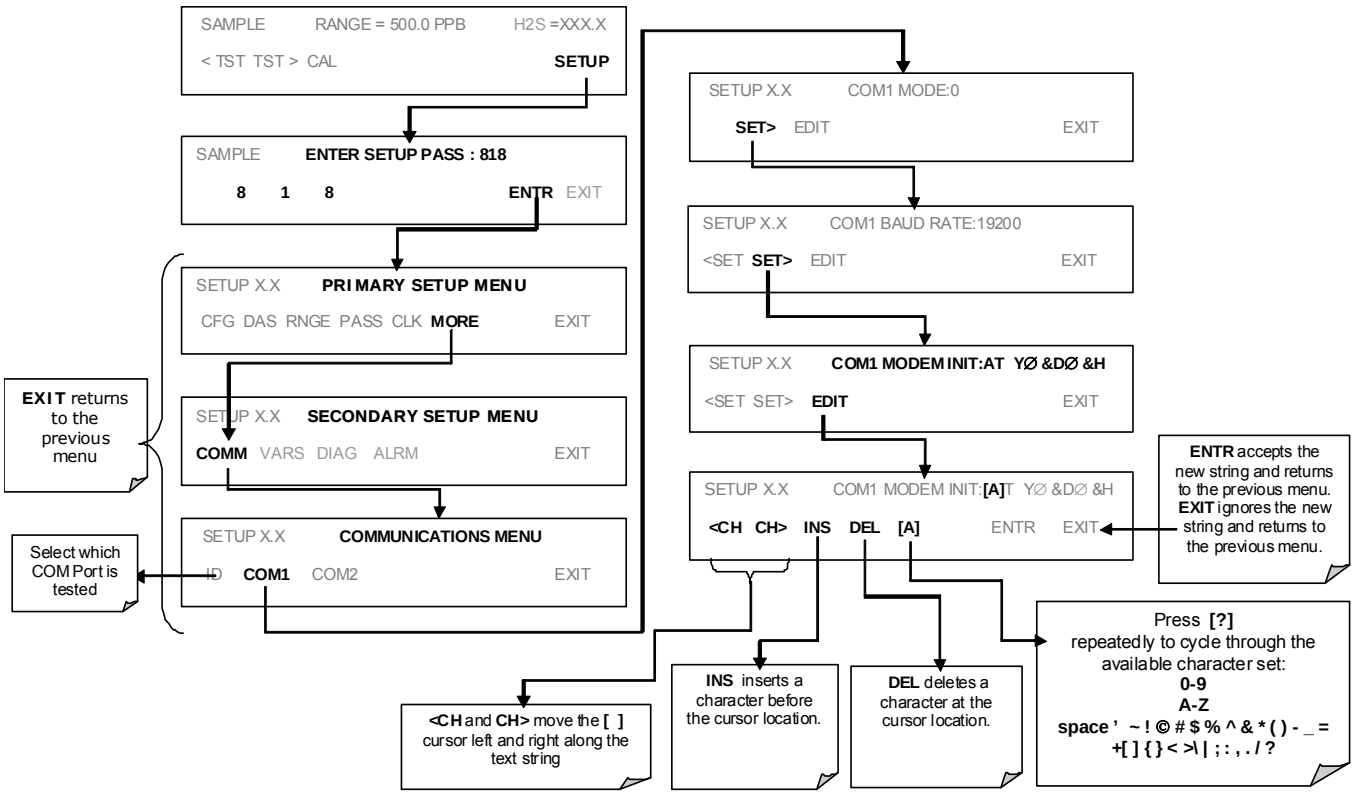

To Initialize the modem press:

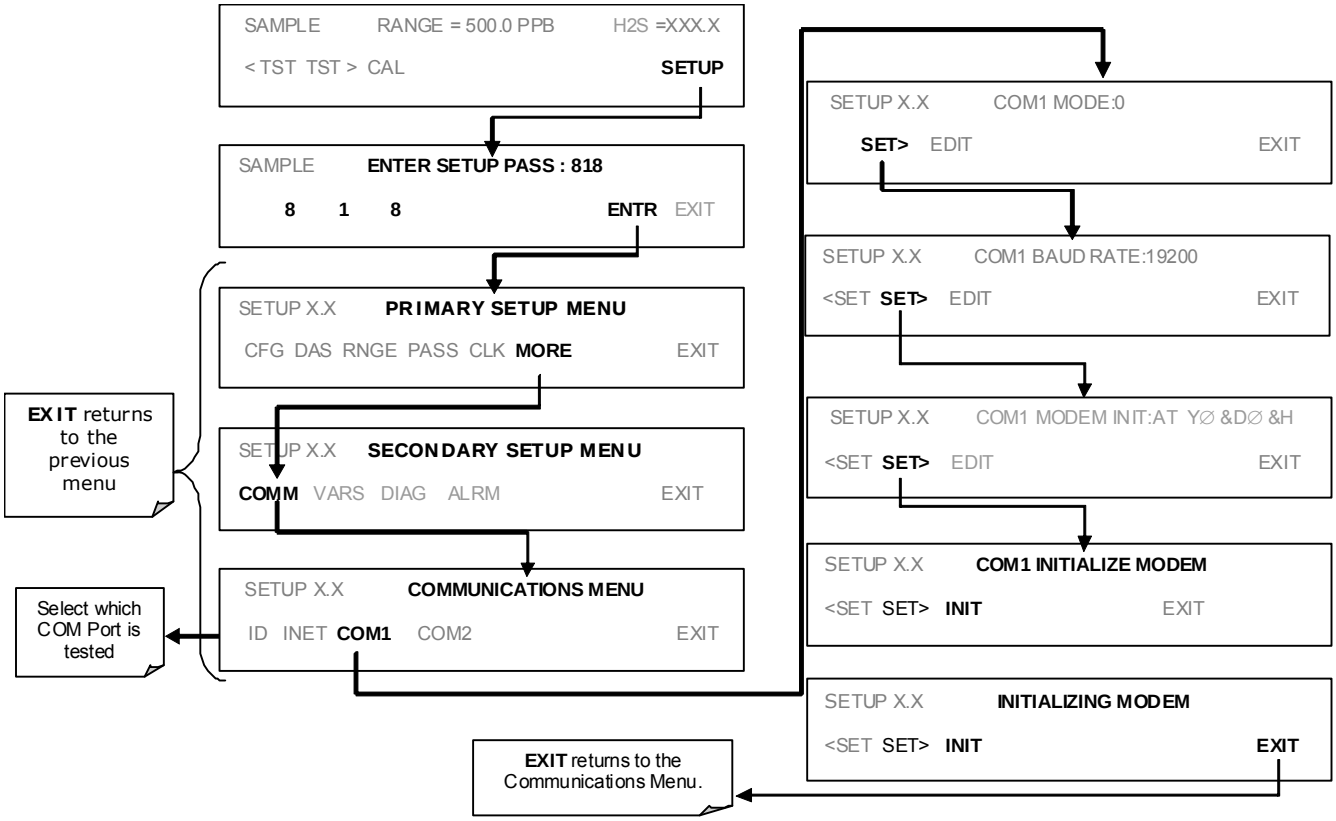

5.1.2.8. COM Port Password Security

In order to provide security for remote access of the T101, a LOGON feature can be enabled to require a password before the instrument will accept commands. This is done by turning on the **SECURITY MODE** (Section 4.10.8). Once the **SECURITY MODE** is enabled, the following items apply.

- A password is required before the port will respond or pass on commands.
- If the port is inactive for one hour, it will automatically logoff, which can also be achieved with the LOGOFF command.
- Three unsuccessful attempts to log on with an incorrect password will cause subsequent logins to be disabled for 1 hour, even if the correct password is used.
- If not logged on, the only active command is the '?' request for the help screen.
- The following messages will be returned at logon:
    - LOGON SUCCESSFUL - Correct password given
    - LOGON FAILED - Password not given or incorrect
    - LOGOFF SUCCESSFUL - Connection terminated successfully

To log on to the Model T101 analyzer with **SECURITY MODE** feature enabled, type:

LOGON 940331

940331 is the default password. To change the default password, use the variable RS232_PASS issued as follows:

V RS232_PASS=NNNNNN

Where N is any numeral between 0 and 9.

5.1.2.9. APICOM Remote Control Program

APICOM is an easy-to-use, yet powerful interface program that allows accessing and controlling any of Teledyne API's main line of ambient and stack-gas instruments from a remote connection through direct cable, modem or Ethernet. Running APICOM, a user can:

- Establish a link from a remote location to the T101 through direct cable connection via RS-232 modem or Ethernet.
- View the instrument's front panel and remotely access all functions that could be accessed when standing in front of the instrument.
- Remotely edit system parameters and set points.
- Download, view, graph and save data for predictive diagnostics or data analysis.
- Retrieve, view, edit, save and upload DAS configurations.
- Check on system parameters for trouble-shooting and quality control.

APICOM is very helpful for initial setup, data analysis, maintenance and trouble-shooting. Figure 4-16 shows an example of APICOM being used to remotely configuration the instrument's DAS feature. Figure 4-20 shows examples of APICOM's main interface, which emulates the look and functionality of the instrument's actual front panel

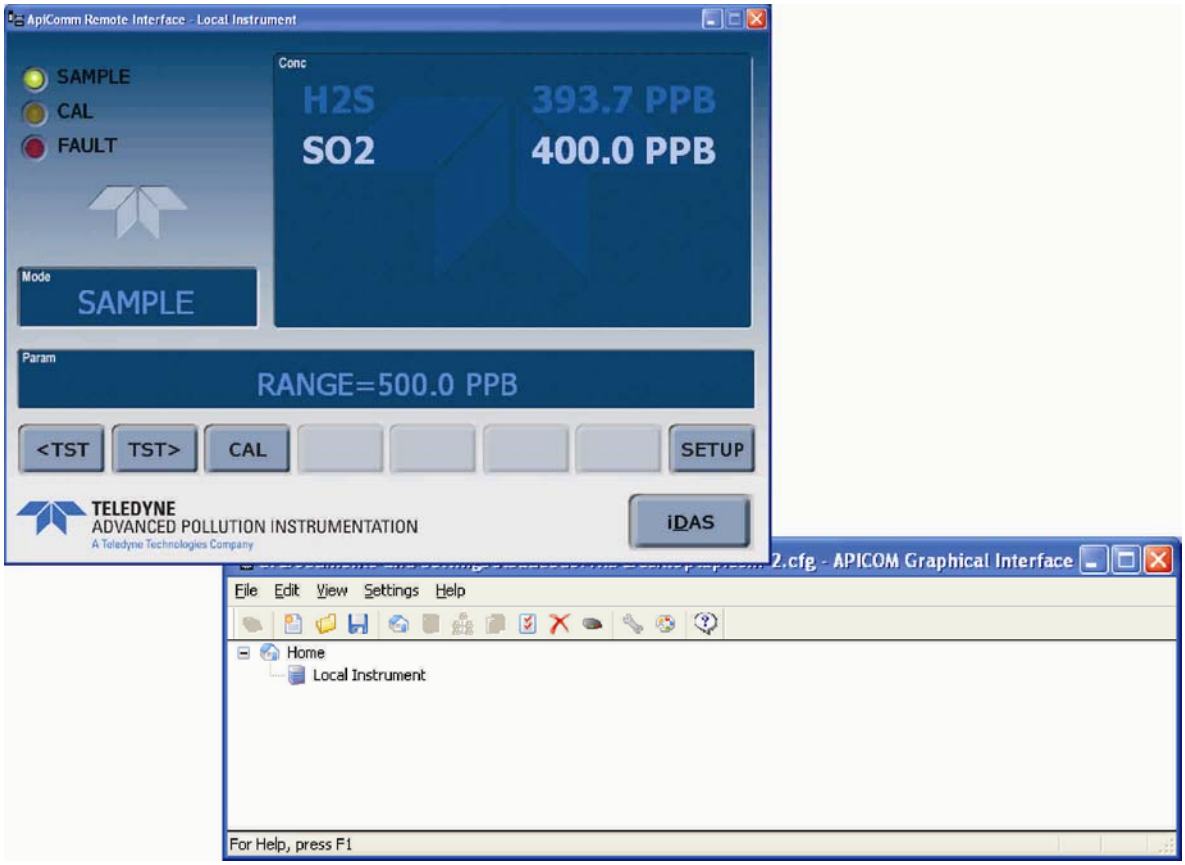

Figure 5-4. APICOM Remote Control Program Interface

APICOM is included free of cost with the analyzer and the latest versions can also be downloaded for free at http://www.teledyne-api.com/software/apicom/.

5.1.3. ADDITIONAL COMMUNICATIONS DOCUMENTATION

Table 5-5. Serial Interface Documents

Interface / Tool	Document Title	Part Number	Available Online*
APICOM	APICOM User Manual	039450000	YES
DAS Manual	Detailed description of the DAS .	028370000	YES
* These documents can be downloaded at http://www.teledyne-api.com/manuals/			

5.1.4. USING THE T101 WITH A HESSEN PROTOCOL NETWORK

5.1.4.1. General Overview of Hessen Protocol

The Hessen protocol is a Multidrop protocol, in which several remote instruments are connected via a common communications channel to a host computer. The remote instruments are regarded as slaves of the host computer. The remote instruments are unaware that they are connected to a Multidrop bus and never initiate Hessen protocol messages. They only respond to commands from the host computer and only when they receive a command containing their own unique ID number.

The Hessen protocol is designed to accomplish two things: to obtain the status of remote instruments, including the concentrations of all the gases measured; and to place remote instruments into zero or span calibration or measure mode. API's implementation supports both of these principal features.

The Hessen protocol is not well defined, therefore while API's application is completely compatible with the protocol itself, it may be different from implementations by other companies.

The following subsections describe the basics for setting up your instrument to operate over a Hessen Protocol network. for more detailed information as well as a list of host computer commands and examples of command and response message syntax, download the Manual Addendum for Hessen Protocol from the Teledyne API web site: http://www.teledyne-api.com/manuals/index.asp .

5.1.4.2. Hessen COMM Port Configuration

Hessen protocol requires the communication parameters of the T101's COMM ports to be set differently than the standard configuration as shown in the table below.

Table 5-6. Hessen RS-232 Communication Parameters

Parameter	Standard	Hessen
Data Bits	8	7
Stop Bits	1	2
Parity	None	Even
Duplex	Full	Half

To change the rest of the COMM port parameters and modes. see Section 4.10.8.

To change the baud rate of the T101's COMM ports, see Section 4.10.9.

NOTE
Make sure that the communication parameters of the host computer are also properly set.

Also, the instrument software has a 200 ms. latency before it responds to commands issued by the host computer. This latency should present no problems, but you should be aware of it and not issue commands to the instrument too frequently.

5.1.4.3. Activating Hessen Protocol

The first step in configuring the T101 to operate over a Hessen protocol network is to activate the Hessen mode for COMM ports and configure the communication parameters for the port(s) appropriately. Press:

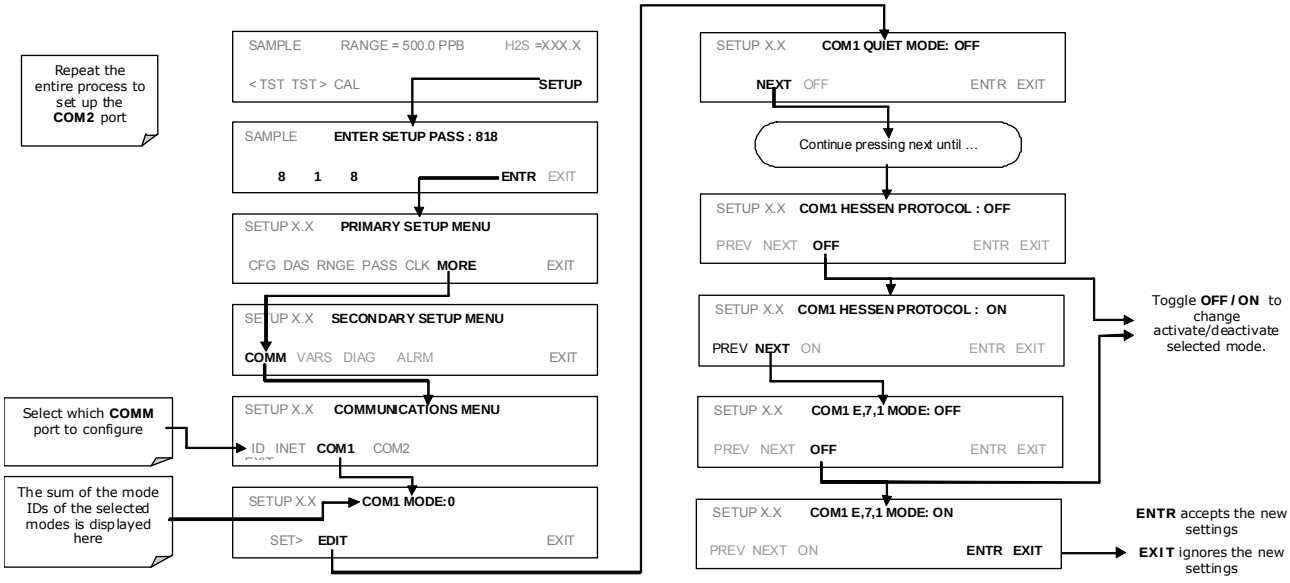

5.1.4.4. Selecting a Hessen Protocol Type

Currently there are two version of Hessen Protocol in use. The original implementation, referred to as **TYPE 1**, and a more recently released version, **TYPE 2** that more flexibility when operating with instruments that can measure more than one type of gas. For more specific information about the difference between **TYPE 1**and **TYPE 2** download the *Manual Addendum for Hessen Protocol* from the Teledyne API web site: http://www.teledyne-api.com/manuals/index.asp .

To select a Hessen Protocol Type press:

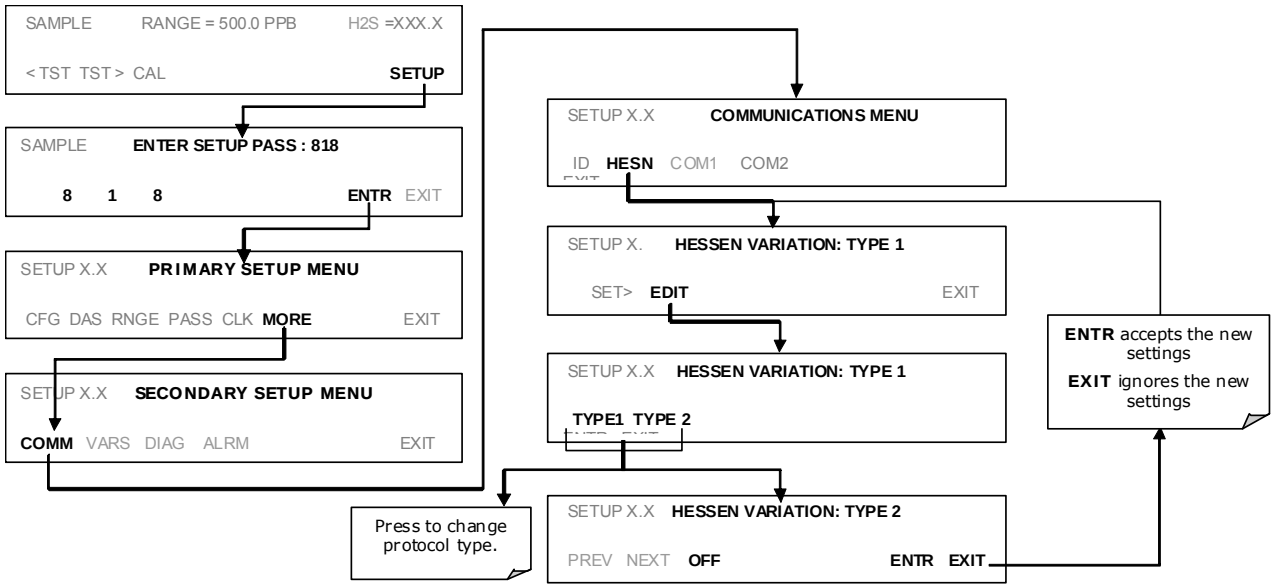

NOTE

While Hessen Protocol Mode can be activated independently for COM1 and COM2, The TYPE selection affects both Ports.

5.1.4.5. Setting The Hessen Protocol Response Mode

The Teledyne API's implementation of Hessen Protocol allows the user to choose one of several different modes of response for the analyzer.

Table 5-7. T101 Hessen Protocol Response Modes

MODE ID	MODE DESCRIPTION
CMD	This is the Default Setting. Reponses from the instrument are encoded as the traditional command format. Style and format of responses depend on exact coding of the initiating command.
BCC	Responses from the instrument are always delimited with <STX> (at the beginning of the response, <ETX> (at the end of the response followed by a 2 digit Block Check Code (checksum), regardless of the command encoding.
TEXT	Responses from the instrument are always delimited with <CR> at the beginning and the end of the string, regardless of the command encoding.

To Select a Hessen response mode, press:

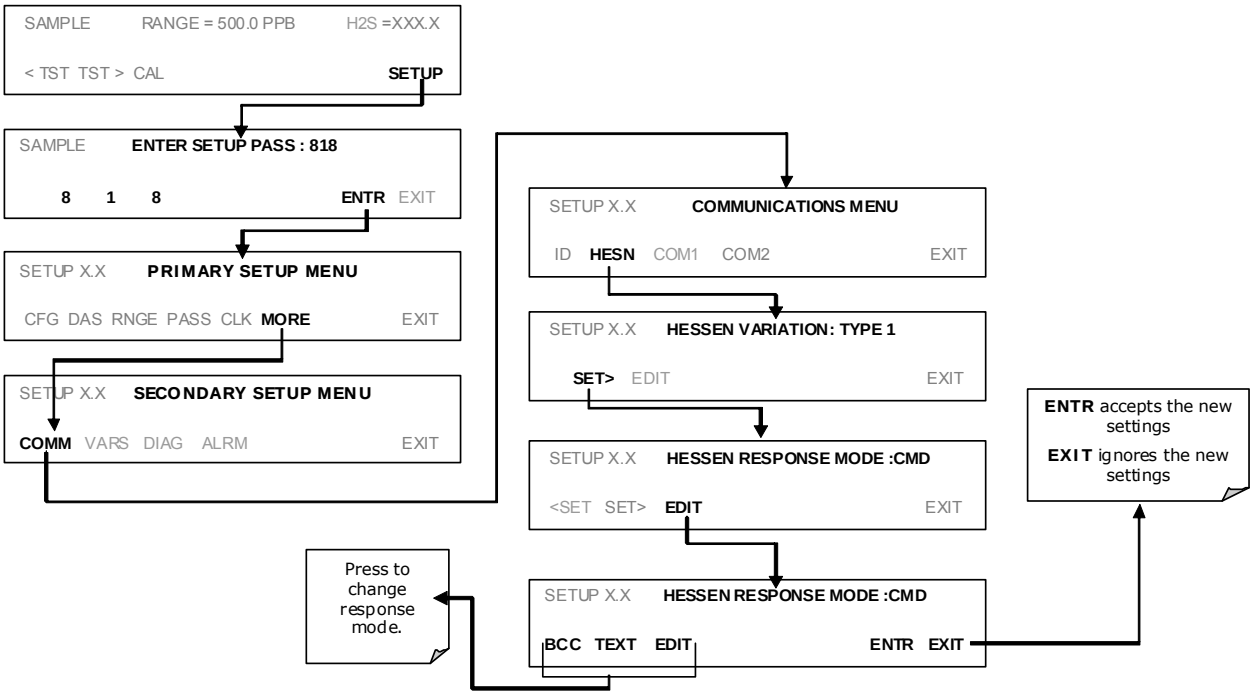

5.1.4.6. Hessen Protocol Gas ID

Since the T101 can be, when the proper optional equipment is installed and operating, a multigas instrument that measures both H_2S and SO_2, both of these gases are listed in the Hessen protocol gas list. In its default state the Hessen protocol firmware assigns both gases a Hessen ID number and actively reports both even if the instrument is only measuring one.

To change or edit these settings press:

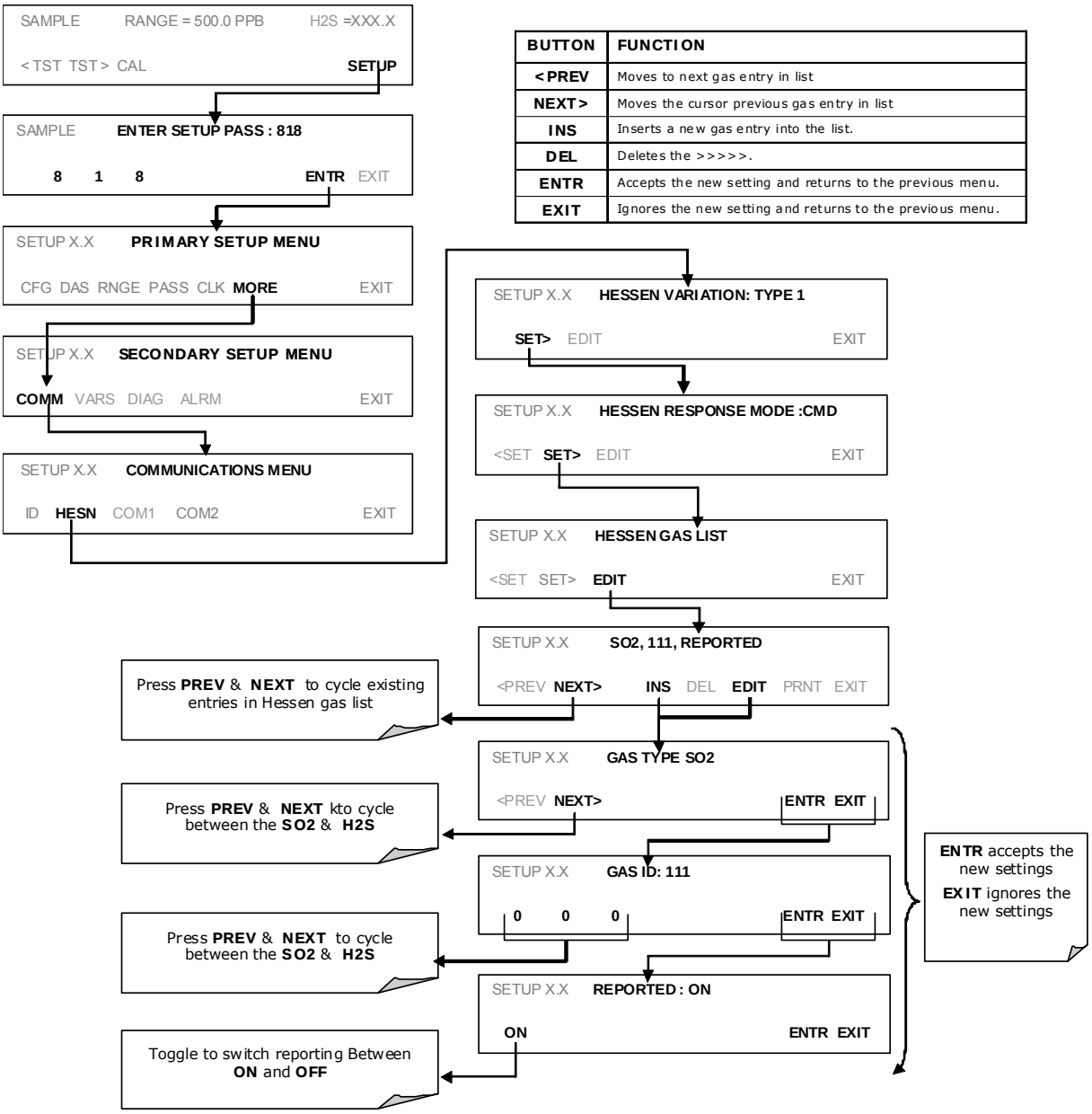

BUTTON	FUNCTION
<PREV	Moves to next gas entry in list
NEXT>	Moves the cursor previous gas entry in list
INS	Inserts a new gas entry into the list.
DEL	Deletes the >>>>>.
ENTR	Accepts the new setting and returns to the previous menu.
EXIT	Ignores the new setting and returns to the previous menu.

5.1.4.7. Setting Hessen Protocol Status Flags

Teledyne API's implementation of Hessen protocols includes a set of status bits that the instrument includes in responses to inform the host computer of its condition. Each bit can be assigned to one operational and warning message flag. The default settings for these bit/flags are:

Table 5-8. Default Hessen Status Bit Assignments

STATUS FLAG NAME		DEFAULT BIT ASSIGNMENT
WARNING FLAGS		
SAMPLE FLOW WARNING		0001
PMT DET WARNING		0002
UV LAMP WARNING		0002
HVPS WARNING		0004
DARK CAL WARNING		0008
RCELL TEMP WARNING		0010
IZS TEMP WARNING		0020
PMT TEMP WARNING		0040
CONV TEMP WARNING		1000
OPERATIONAL FLAGS		
Instrument Off		0100
In Manual Calibration Mode		0200
In Zero Calibration Mode		0400
In Span Calibration Mode		0800
UNITS OF MEASURE FLAGS		
UGM		0000
MGM		2000
PPB		4000
PPM		6000
SPARE/UNUSED BITS		0080, 8000
UNASSIGNED FLAGS		
Box Temp Warning	Analog Cal Warning	
Sample Press Warning	Cannot Dyn Zero	
System Reset	Cannot Dyn Span	
Rear Board Not Detected	Invalid Conc	
Relay Board Warning		

NOTES

It is possible to assign more than one flag to the same Hessen status bit. This allows the grouping of similar flags, such as all temperature warnings, under the same status bit.

Be careful not to assign conflicting flags to the same bit as each status bit will be triggered if any of the assigned flags is active.

To assign or reset the status flag bit assignments, press:

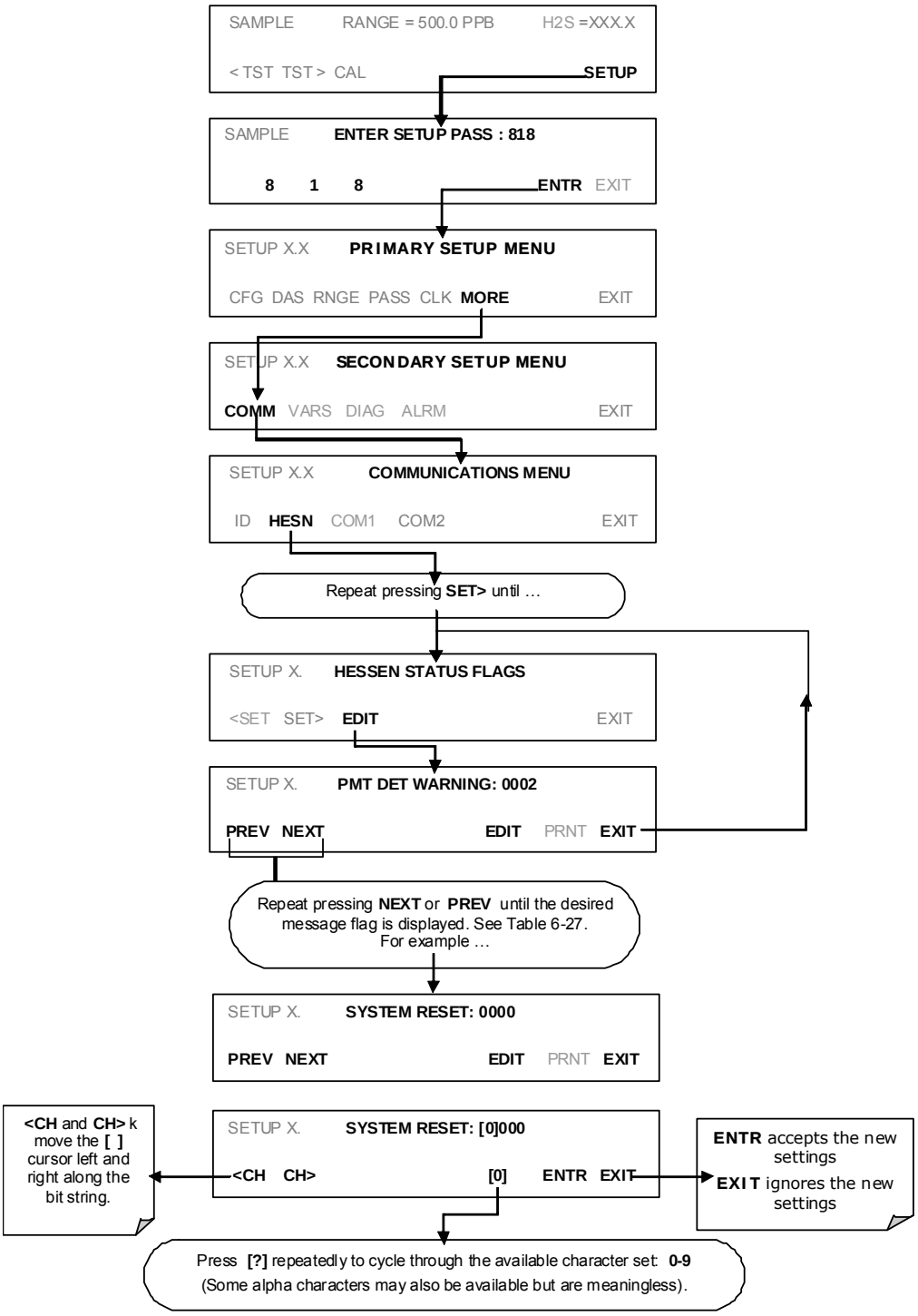

This page intentionally left blank.

6. CALIBRATION PROCEDURES

This Section describes the calibration procedures for the T101. All of the methods described in this section can be initiated and controlled through the COM ports.

NOTE

If you are using the T101 for US-EPA controlled monitoring of SO_2, see Section 8 for information on the EPA calibration protocol.

6.1. CALIBRATION PREPARATIONS

The calibration procedures in this section assume that the analog output reporting range and units of measure, reporting range mode, and reporting range span have already been selected for the analyzer. If this has not been done, please do so before continuing (Section 4.4.4 for instructions).

Also, unless otherwise stated, the procedures in this Section are written with the assumption that the T101 is being used in its default configuration as an H_2S analyzer. The same methods and setups can be followed when the instrument is configured for SO_2 measurement by substituting SO_2 span gas for the H2S span gas listed in the procedure.

For analyzers configured in $H_2S \rightarrow SO_2$ multigas mode, see Section 6.8

NOTE

In applications where the instrument may be used to measure SO_2 as well as H_2S make sure that the calibration gas being used matches the gas measurement mode in which the instrument is set during the calibration procedure.

6.1.1. REQUIRED EQUIPMENT, SUPPLIES, AND EXPENDABLES

Calibration of the Model T101 analyzer requires a certain amount of equipment and supplies. These include, but are not limited to, the following:

- Zero-air source
- Hydrogen sulfide span gas source
- Gas lines - all gas line materials should be Teflon-type or glass.
- A recording device such as a strip-chart recorder and/or data logger (optional).

6.1.2. ZERO AIR

Zero air is similar in chemical composition to the Earth's atmosphere but scrubbed of all components that might affect the analyzer's readings. For H_2S measuring devices, zero air should be similar in composition to the sample gas but devoid of H_2S, hydrocarbons, and Sulfur dioxide (SO_2).

Devices such as the API Model 701 zero air generator that condition ambient air by drying and removal of pollutants are available. We recommend this type of device for generating zero air.

6.1.3. GAS STANDARDS

Span gas is specifically mixed to match the chemical composition of the gas being measured at about 90% of the desired full measurement range. For example, if the measurement range is 500 ppb, the span gas should have an H_2S concentration of about 450 ppb.

We strongly recommend that span calibration is carried out with bottled, calibrated H_2S or SO_2 span gas, although it is possible to use a permeation tube such as that included in the IZS valve option. Span gases should be certified to a specific accuracy to ensure accurate calibration of the analyzer. Typical gas accuracy for calibrated span gases is 1 or 2 %. H_2S and SO_2 standard gases should be mixed in nitrogen.

6.1.4. PERMEATION TUBES

Teledyne API offers an IZS option operating with permeation devices. The accuracy of these devices is about ±5%. Whereas this may be sufficient for quick, daily calibration checks, we recommend the use of certified H_2S gases for accurate calibration.

NOTE

Applications requiring US-EPA equivalency do not allow permeation devices to be used as sources of span gas for calibration of the analyzer where EPA equivalency is required, such as SO_2 monitoring.

6.1.5. CALIBRATION GAS TRACEABILITY

All equipment used to produce calibration gases should be verified against standards of the National Institute for Standards and Technology (NIST). To ensure NIST traceability, we recommend acquiring cylinders of working gas that are certified to be traceable to NIST Standard Reference Materials (SRM). These are available from a variety of commercial sources.

Table 6-1. NIST-SRM's Available for Traceability of H2S and SO2 Calibration Gases

NIST-SRM[4]	TYPE	NOMINAL CONCENTRATION
2730	Hydrogen sulfide in N_2	5000 ppb
2731	Hydrogen sulfide in N_2	20 ppm
1693a	Sulfur dioxide in N_2	50 ppm
1694a	Sulfur dioxide in N_2	100 ppm
1661a	Sulfur dioxide in N_2	500 ppm

6.1.6. DATA RECORDING DEVICES

A strip chart recorder, data acquisition system or digital data acquisition system should be used to record data from the T101's serial or analog outputs. If analog readings are used, the response of the recording system should be checked against a NIST traceable voltage source or meter. Data recording device should be capable of bi-polar operation so that negative readings can be recorded. For electronic data recording, the T101 provides an internal data acquisition system (DAS), which is described in detail in Section 4.8.

6.2. MANUAL CALIBRATION

The following section describes the basic method for manually calibrating the Model T101 analyzer in H_2S measurement mode. The same method may be used to calibrate the T101 analyzers configured for SO_2 measurement by substituting SO_2 span gas for the H_2S span gas listed. See Section 6.8 for instructions on calibrating analyzers configured for multigas measurement mode.

NOTE on Calibration and Calibration Checks

If you wish to perform a calibration CHECK, do not press ENTR - see Section 6.3.

Pressing ENTR during the following procedure re-calculates the stored values for H2S OFFS[1] and H2S SLOPE[1] (instrument response curve) and alters the instrument's calibration.

STEP ONE: Connect the sources of zero air and span gas as shown below.

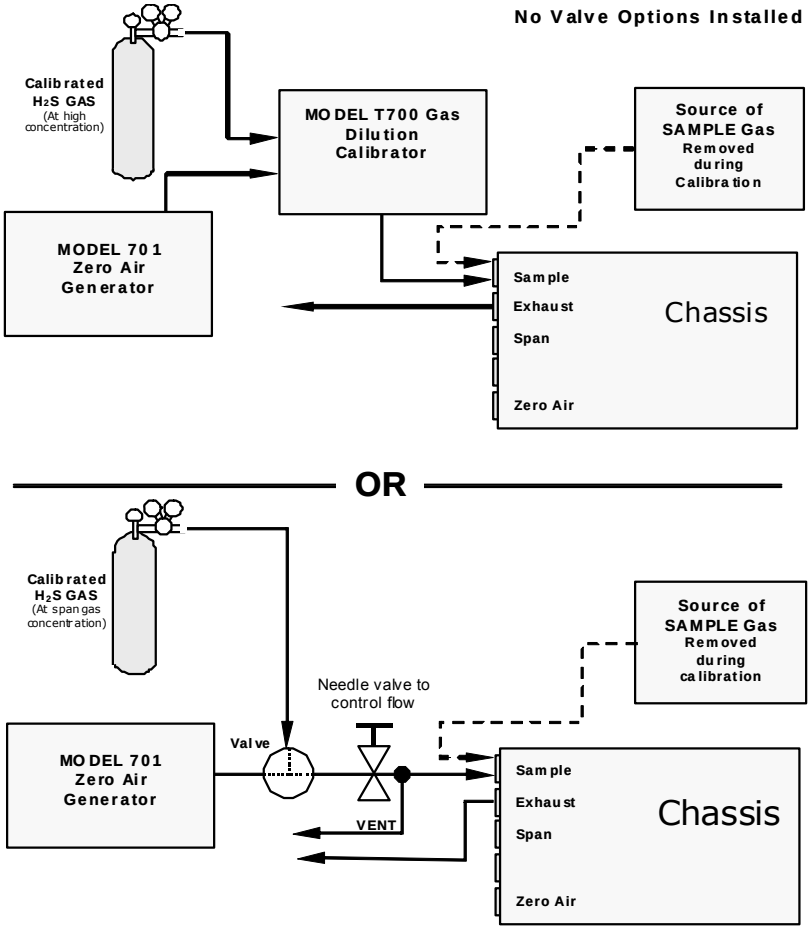

Figure 6-1. Setup for Manual Calibration without Z/S Valve or IZS Option

STEP TWO: Set the expected H_2S span gas concentrations. In this example the instrument is set for single (**SNGL**) range mode with a reporting range span of 500 ppb.

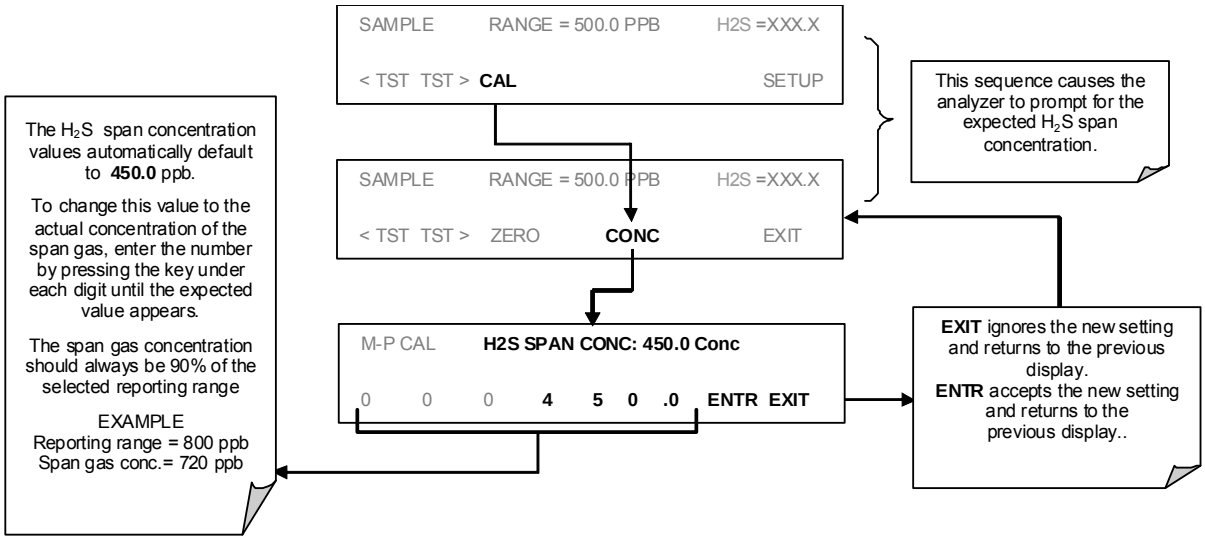

STEP THREE: Perform the zero/span calibration:

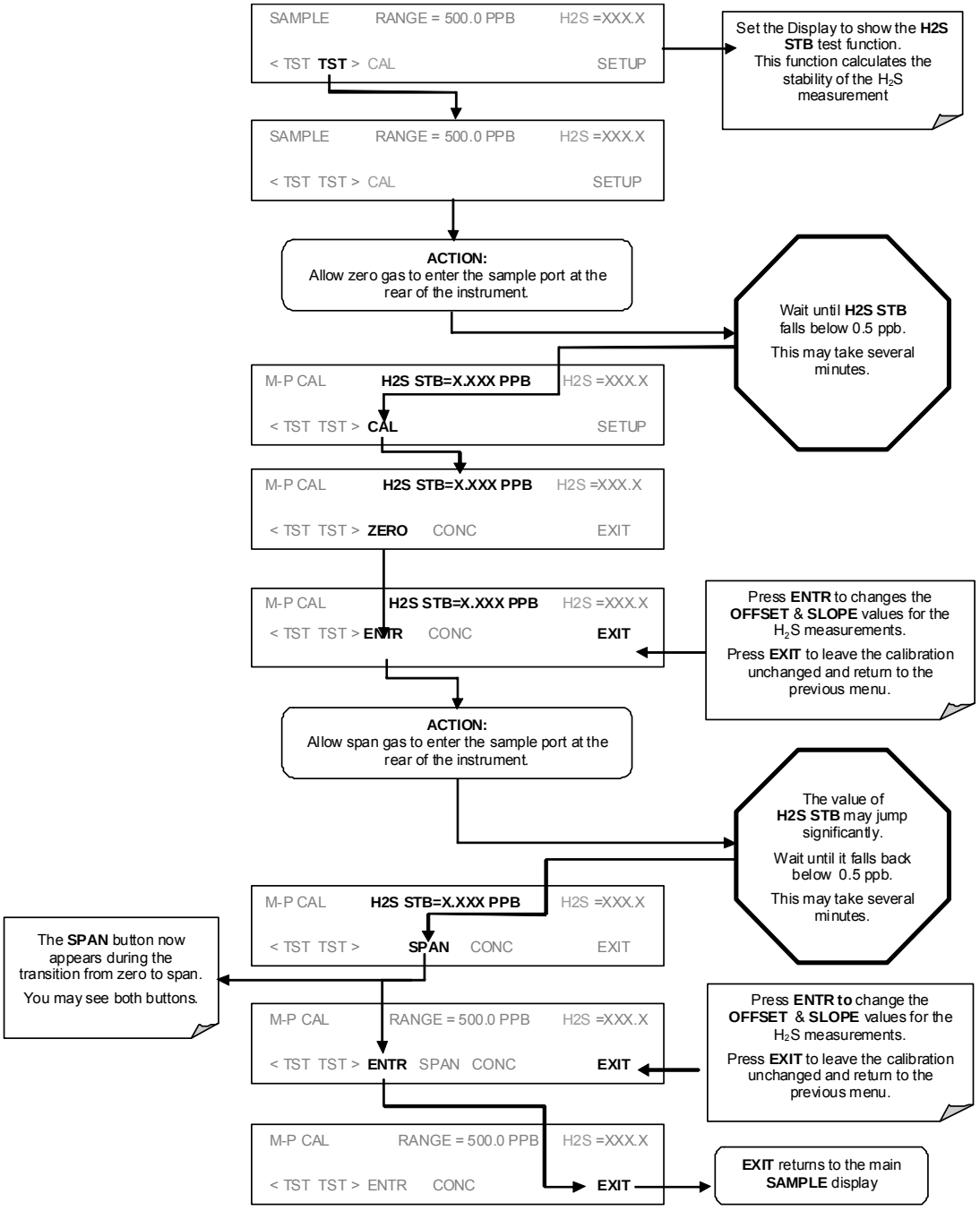

NOTE

If the ZERO or SPAN buttons are not displayed during zero or span calibration, the measured concentration value is too different from the expected value and the analyzer does not allow zeroing or spanning the instrument.

Consult Section 9.3 for more information on calibration problems.

6.3. MANUAL CALIBRATION CHECKS

Informal calibration checks, which only evaluate but do not alter the analyzer's response curve, are recommended as a regular maintenance item and in order to monitor the analyzer's performance.

The following section describes the basic method for manually checking the calibration of the Model T101 analyzer in H_2S measurement mode. The same method may be used to manually check the calibrate the T101 analyzers configured for SO_2 measurement by substituting SO_2 span gas for the H_2S span gas listed. See Section 6.8 for instructions for performing calibration checks on analyzers configured for multigas measurement mode.

To carry out a calibration check rather than a full calibration, follow these steps.

STEP ONE: Connect the sources of zero air and span gas as shown in Figure 6.1.

STEP TWO: Perform the zero/span calibration check procedure:

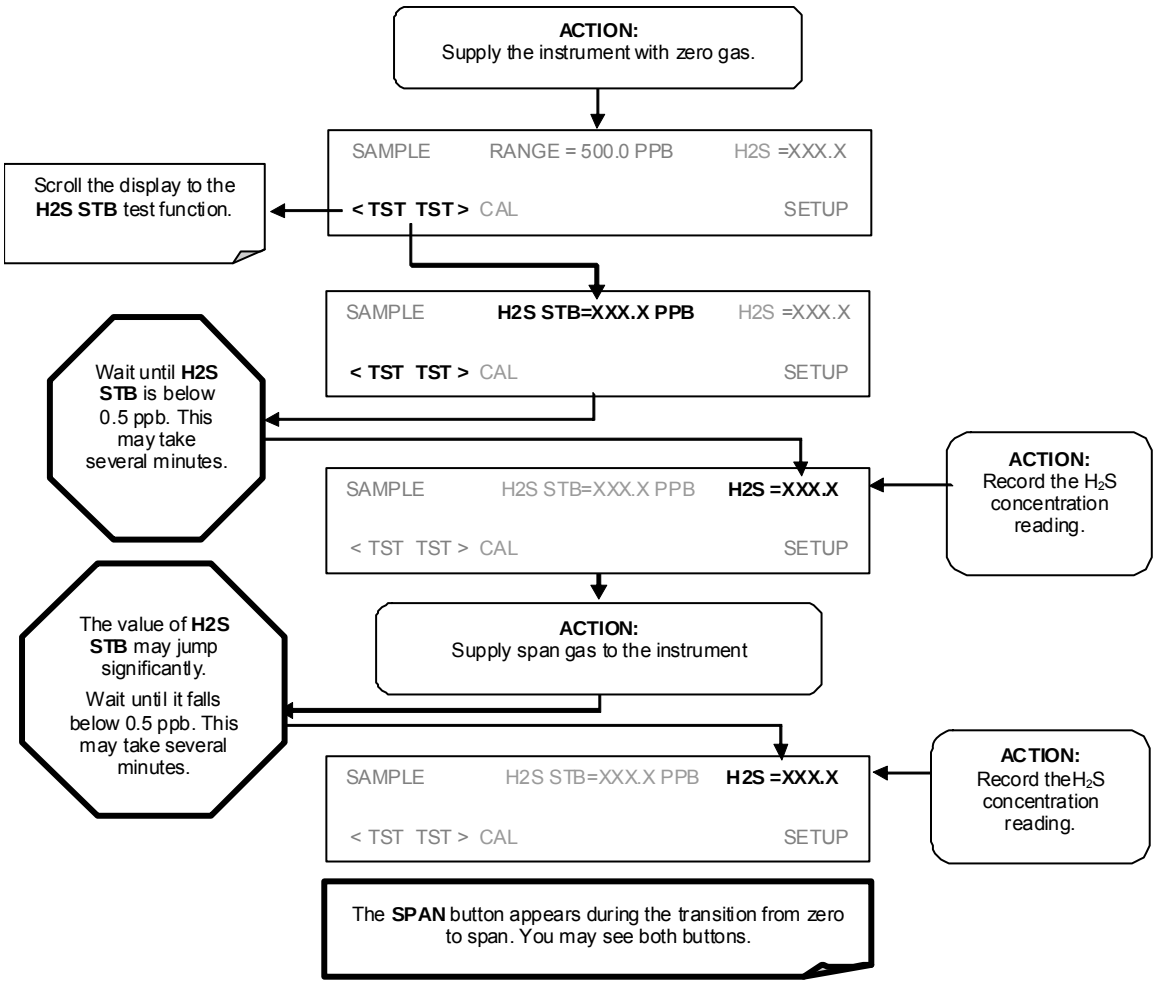

6.4. MANUAL CALIBRATION WITH ZERO/SPAN VALVES

Zero and Span calibrations using the Zero/Span Valve option are similar to that described in Section 6.2 except that:

Zero air and span gas is supplied to the analyzer through the zero gas and span gas inlets rather than through the sample inlet.

The zero and cal operations are initiated directly and independently with dedicated buttons (**CALZ** & **CALS**)

STEP ONE: As shown below connect the sources of zero air and span gas to the respective ports on the rear panel (Figure 3-2).

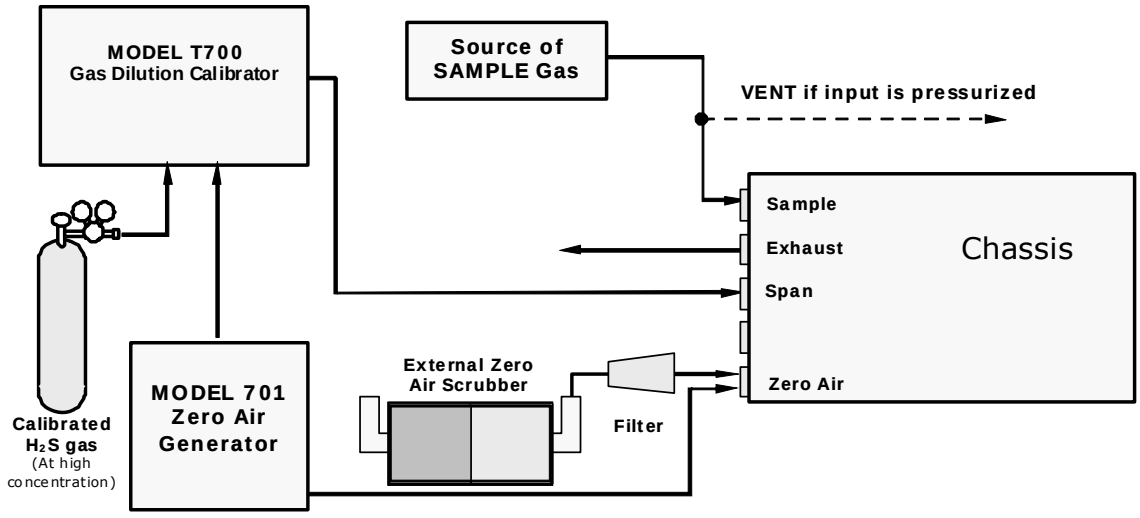

Figure 6-2. Setup for Manual Calibration with Z/S Valve Option Installed

Step Two: Set the expected H_2S span gas value:

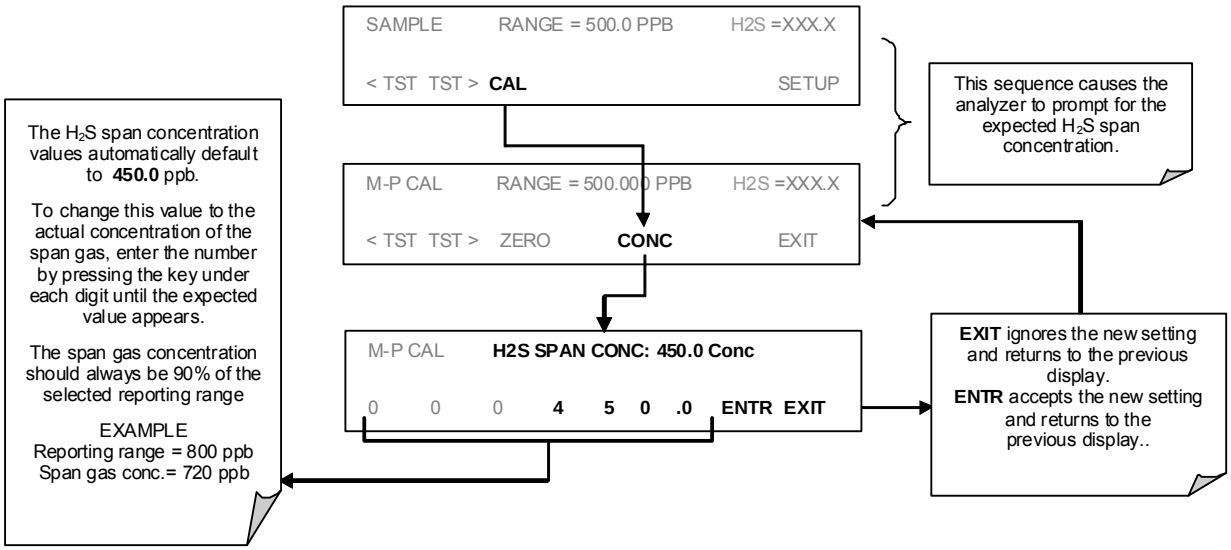

Step Three: Perform the calibration or calibration check according to the following flow chart:

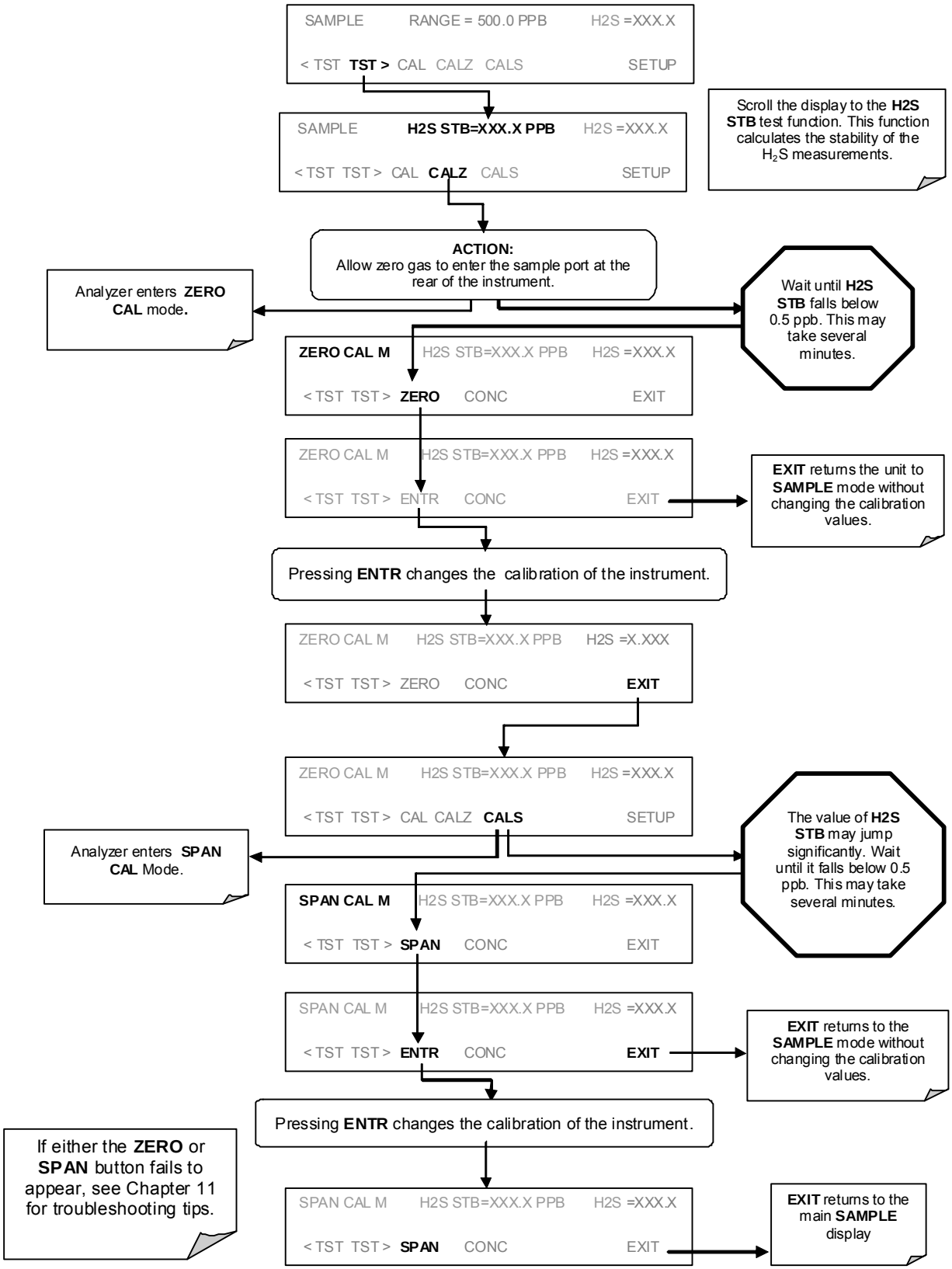

6.5. MANUAL CALIBRATION WITH IZS OPTION

The following section describes the basic method for manually calibrating the Model T101 analyzer in H_2S measurement mode using the IZS option. The same method may be used to calibrate the T101 analyzers configured for SO_2 measurement but requires that an SO_2 permeation tube be installed in the instrument instead of the standard H_2S tube. (SO_2 permeation tubes differ from H_2S tubes and can be purchased directly from a manufacturer).

See Section 6.8 for instructions on calibrating analyzers configured for multigas measurement mode.

Under the best conditions, the accuracy off the H_2S effusion rate of the IZS option's permeation tube is about ±5%. This can be subject to significant amounts of drift as the tube ages and the amount of H_2S contained in the tube is depleted. Whereas this may be sufficient for calibrating instrument configured for H_2S measurement and for informal calibration checks of instruments measuring SO_2, it is not adequate for formal SO_2 calibrations and is not approved for use by the US EPA as a calibration source for calibrating SO_2 monitoring equipment.

For applications where more stringent calibration requirements are specified for an instrument with an IZS option installed the following provisions must be followed.

1. Zero air and span gas must be supplied to the analyzer through the sample gas inlet as depicted in Figure 6-1.
2. The calibration procedure must be initiated using the **CAL** button (*not* the **CALZ** and **CALS** buttons) using the procedure defined in Section 6.2.
3. Using the **CAL** button does not activate the zero/span or sample/cal valves of the IZS option, thus allowing the introduction of zero air and sample gas through the sample port from more accurate, external sources such as a calibrated bottle of H_2S and SO_2 or a Model T700 Dilution Calibrator.

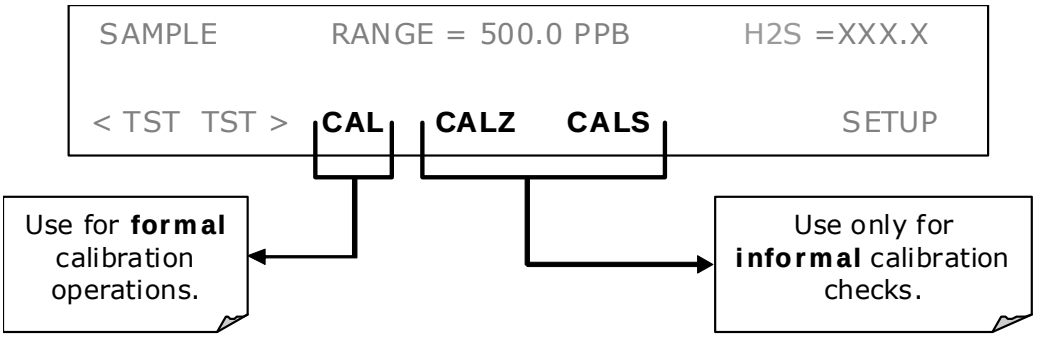

6.6. MANUAL CALIBRATION CHECKS WITH IZS OR ZERO/SPAN VALVES

Zero and span checks using the zero/span valve or IZS option are similar to that described in Section 6.3, except:

On units with an IZS option installed, zero air and span gas are supplied to the analyzer through the zero gas inlet and from ambient air.

On units with a zero/span valve option installed, zero air and span gas are supplied to the analyzer through the zero gas and span gas inlets from two different sources.

The zero and calibration operations are initiated directly and independently with dedicated buttons CALZ and CALS.

To perform a manual calibration check of an analyzer with a zero/span valve or IZS Option installed, use the following method:

NOTE

The instrument can only be fitted with one type of permeation tube at a time. Therefore the IZS option can only be used to calibrate or check the instrument for one gas, H_2S or SO_2, but not both. (SO_2 permeation tubes differ from H_2S tubes and can be purchased directly from a manufacturer).

STEP ONE: Connect the sources of Zero Air and Span Gas as shown below.

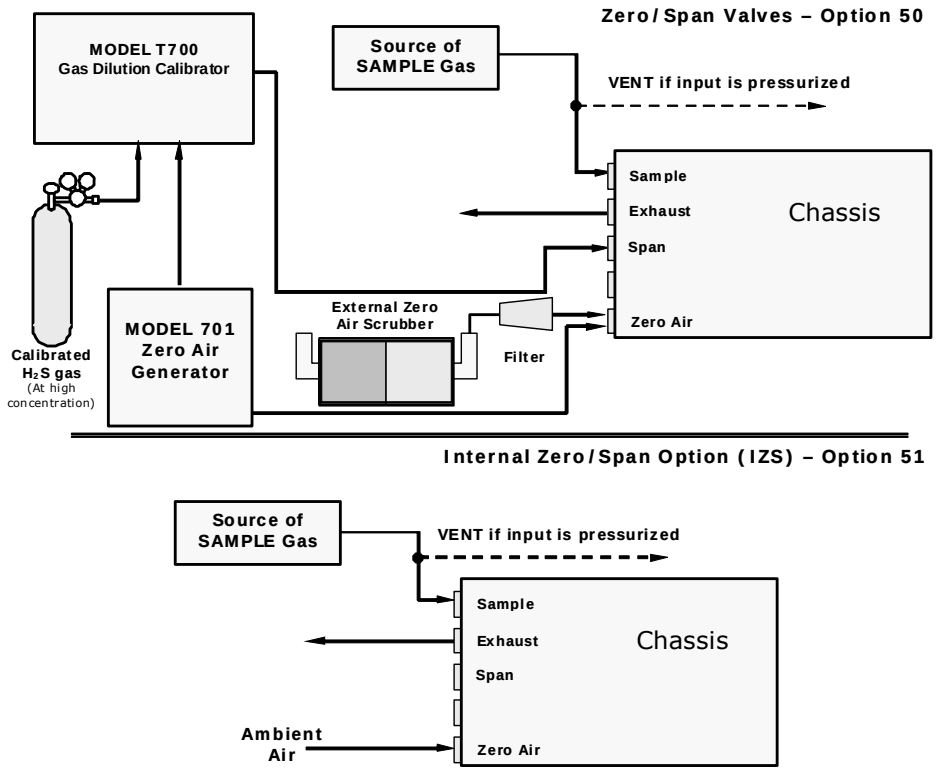

Figure 6-3. Setup for Manual Calibration Check with Z/S Valve or IZS Option

STEP TWO: Perform the zero/span check.

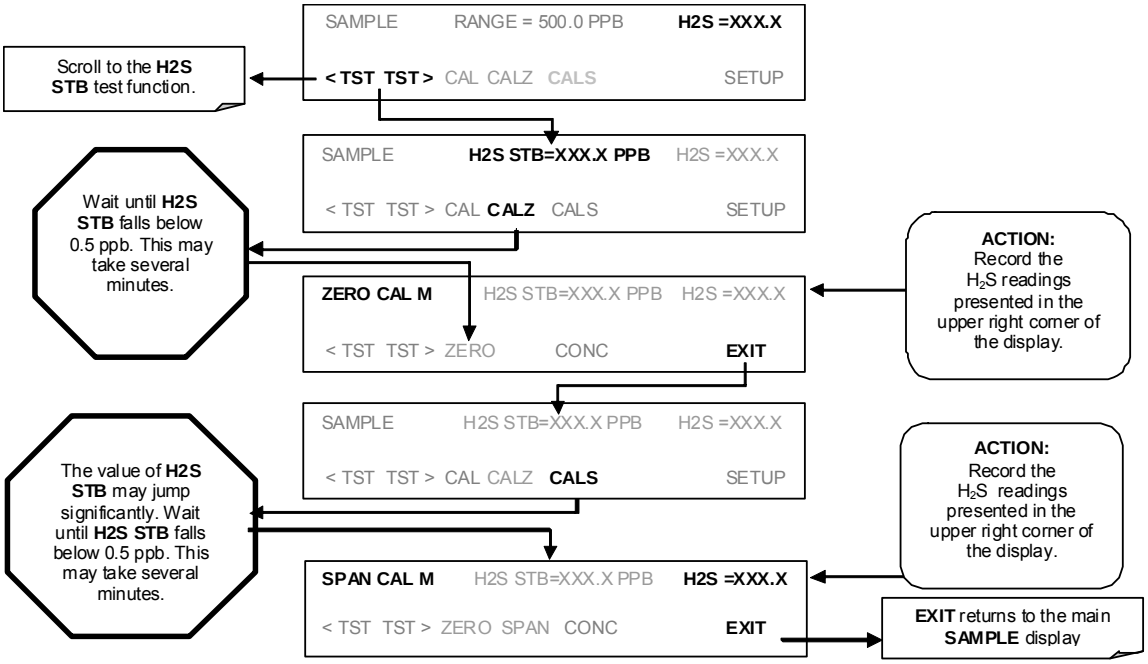

6.7. MANUAL CALIBRATION IN INDEPENDENT OR AUTO REPORTING RANGE MODES

If the analyzer is being operated in Ind or Auto Range mode, then the High and Low ranges must be independently checked.

When the analyzer is in either Independent or Auto Range modes the user must run a separate calibration procedure for each range. After pressing the Cal, CALZ or Cals buttons the user is prompted for the range that is to be calibrated as seen in the CALZ example below:

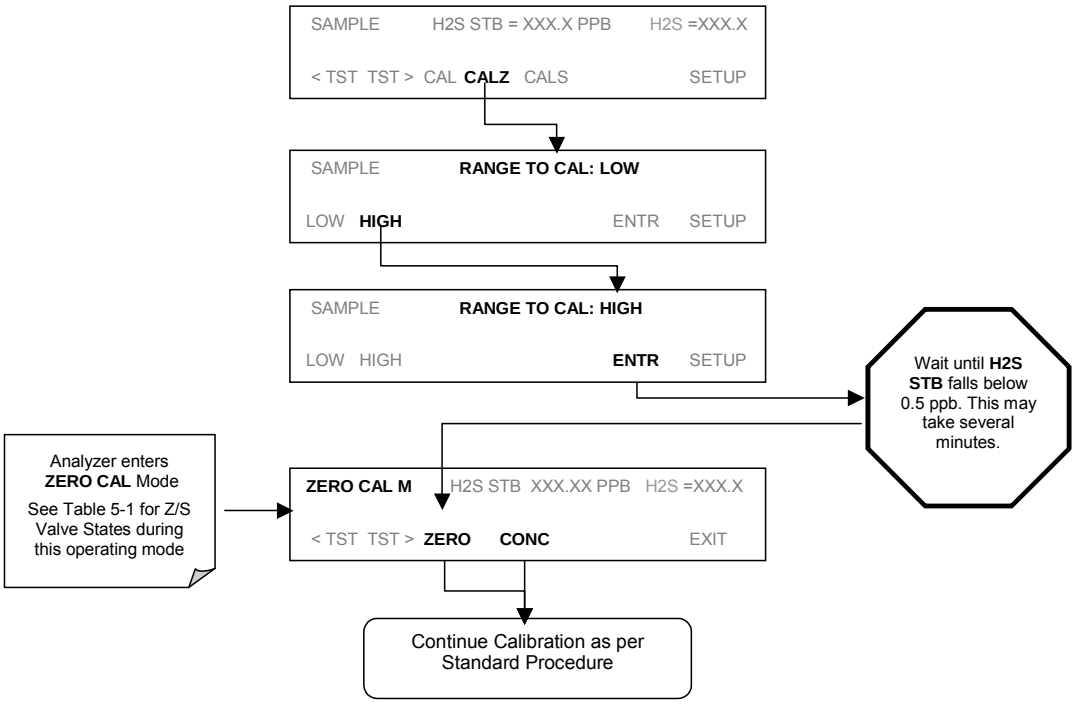

Once this selection is made, the calibration procedure continues as previously described in Sections 6.2 through 6.6. The other range may be calibrated by starting over from the main **SAMPLE** display.

6.7.1. CALIBRATION WITH REMOTE CONTACT CLOSURES

Contact closures for controlling calibration and calibration checks are located on the rear panel CONTROL IN connector. Instructions for setup and use of these contacts can be found in Section 5.1.2.

When the appropriate contacts are closed for at least 5 seconds, the instrument switches into zero, low span or high span mode and the internal zero/span valves will be automatically switched to the appropriate configuration. The remote calibration contact closures may be activated in any order. It is recommended that contact closures remain closed for at least 10 minutes to establish a reliable reading; the instrument will stay in the selected mode for as long as the contacts remain closed.

If contact closures are used in conjunction with the analyzer's AutoCal (Section 6.9) feature and the AutoCal attribute CALIBRATE is enabled, the T101 will not re-calibrate the analyzer until the contact is opened. At this point, the new calibration values will be recorded before the instrument returns to SAMPLE mode.

If the AutoCal attribute CALIBRATE is disabled, the instrument will return to SAMPLE mode, leaving the instrument's internal calibration variables unchanged.

6.8. MANUAL CALIBRATION IN MULTIGAS MEASUREMENT MODE

If the analyzer is being operated in multigas measurement mode, the methods and setups for performing calibrations are identical to those defined in Sections 6.2 and 6.4 with the two exceptions

Some provision must be made for supplying both types of calibrated span gas to the analyzer. A typical setup for this might be:

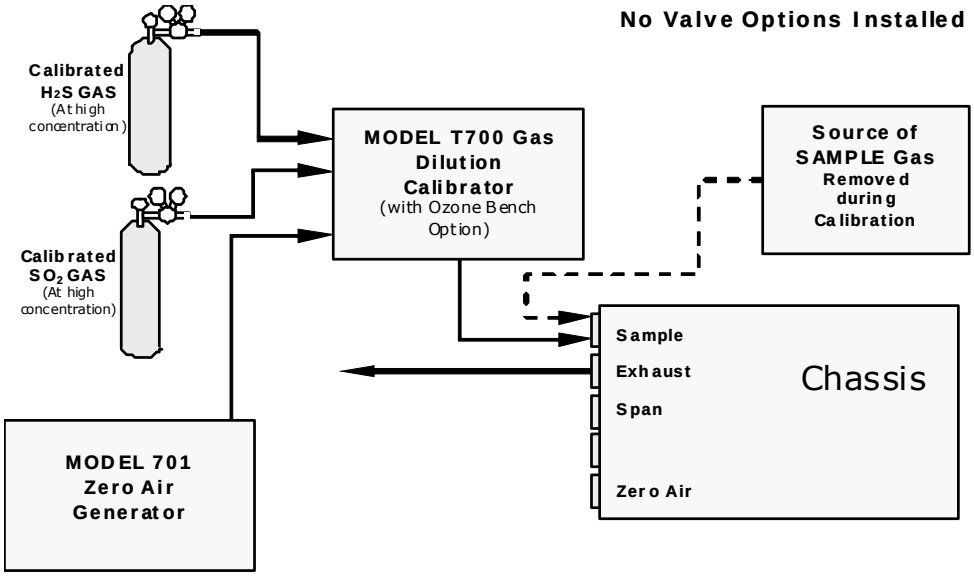

Figure 6-4. Typical Setup for Manual Calibratio in Multigas Measurement Mode

The analyzer will ask to have the **GAS TYPE** specified at the beginning of the process as follows:

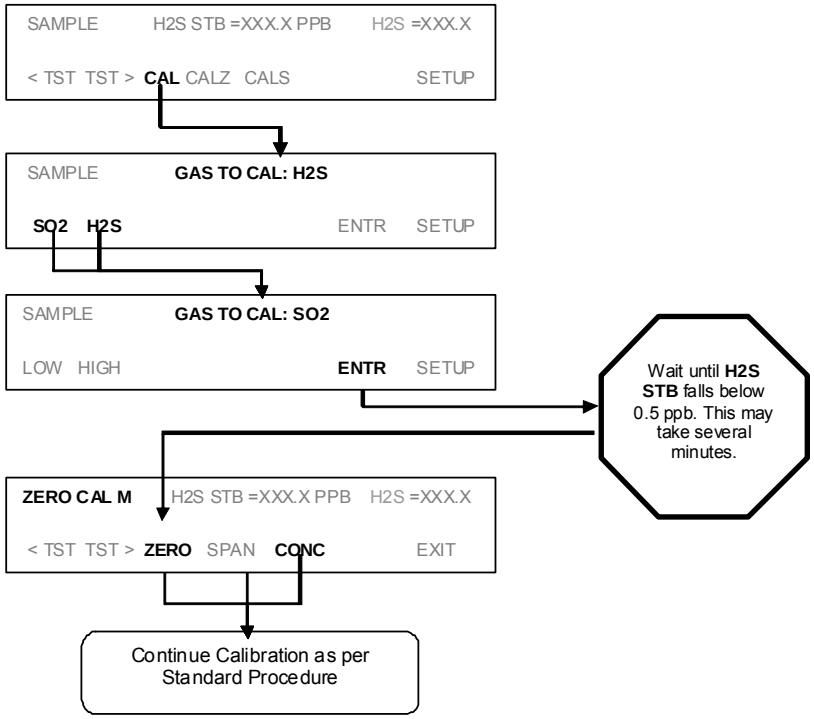

Once this selection is made, the calibration procedure continues as previously described. The other gas may be calibrated by starting over from the main **SAMPLE** display.

6.9. AUTOMATIC CALIBRATION/CHECKS (AUTOCAL)

The AutoCal system allows unattended, periodic operation of the zero/span valve options by using the analyzer's internal time of day clock. AutoCal operates by executing user-defined sequences to initiate the various calibration modes of the analyzer and to open and close valves appropriately. It is possible to program and run up to three separate sequences (**SEQ1**, **SEQ2** and **SEQ3**). Each sequence can operate in one of three modes or be disabled.

Table 6-2. AutoCal Modes

MODE	ACTION
DISABLED	Disables the sequence
ZERO	Causes the sequence to perform a zero calibration or check
ZERO-SPAN	Causes the sequence to perform a zero and span concentration calibration or check
SPAN	Causes the sequence to perform a span concentration calibration or check

Each mode has seven parameters that control operational details of the sequence (Table 6-3).

Table 6-3. AutoCal Attribute Setup Parameters

Attribute Name	ACTION
Timer Enabled	Turns on the Sequence timer
Starting Date	Sequence will operate on Starting Date
Starting Time	Sequence will operate at Starting Time
Delta Days	Number of days to skip between each sequence
Delta Time	Incremental delay on each Delta Day that the sequence starts.
Duration	Duration of the sequence in minutes
Calibrate	Enable to do dynamic zero/span calibration, disable to do a cal check only. This must be set to OFF for units used in US EPA applications and with IZS option installed.

NOTE

The programmed STARTING_TIME must be a minimum of 5 minutes later than the real time clock (See Section 4.4.6 for setting real time clock).

NOTE

Avoid setting two or more sequences at the same time of the day. Any new sequence which is initiated whether from a timer, the COM ports, or the contact closure inputs will override any sequence which is in progress.

NOTE

If at any time an illegal entry is selected (Example: Delta Days > 367) the ENTR button will disappear from the display.

The following example sets Sequence2 to carry out a zero-span calibration every other day starting at 01:00 on September 4, 2002, lasting 15 minutes. This sequence will start 0.5 hours later each day.

Table 6-4. Example Auto-Cal Sequence

MODE AND ATTRIBUTE	VALUE	COMMENT
SEQUENCE	2	Define Sequence #2
MODE	ZERO-SPAN	Select Zero and Span Mode
TIMER ENABLE	ON	Enable the timer
STARTING DATE	Sept. 4, 2002	Start after Sept 4, 2002
STARTING TIME	01:00	First Span starts at 01:00
DELTA DAYS	2	Do Sequence #2 every other day
DELTA TIME	00:30	Do Sequence #2 0.5 h later each day
DURATION	15.0	Operate Span valve for 15 min
CALIBRATE	ON	The instrument will re-set the slope and offset values for the H_2S channel at the end of the AutoCal sequence

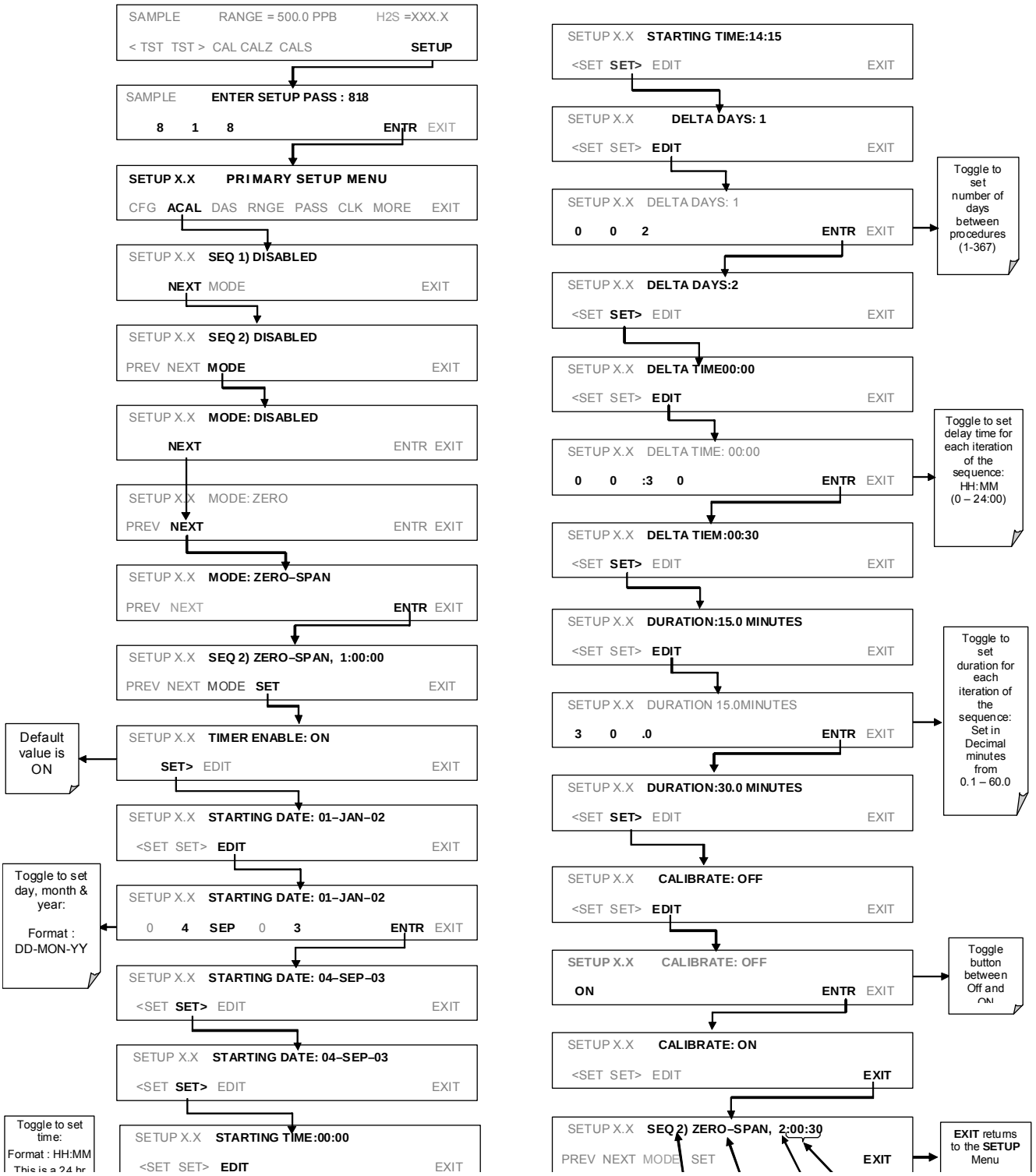

With dynamic calibration turned on, the state of the internal setup variables dyn_Span and **DYN_ZERO** is set to **ON** and the instrument will reset the slope and offset values for the H_2S response each time the AutoCal program runs. This continuous re-adjustment of calibration parameters can often mask subtle fault conditions in the analyzer.

It is recommended that, if dynamic calibration is enabled, the analyzer's test functions, slope and offset values be checked frequently to assure high quality and accurate data from the instrument.

6.9.1. AUTOCAL OF INSTRUMENTS IN INDEPENDENT OR AUTO REPORTING RANGE MODES

If the analyzer is being operated in **IND** or **AUTO** Range mode, then the High and Low ranges must be specified as part of the Auto Cal set up. This parameter appears at the end of the programming sequences after the **CALIBRATE: ON/OFF** parameter is set. For example:

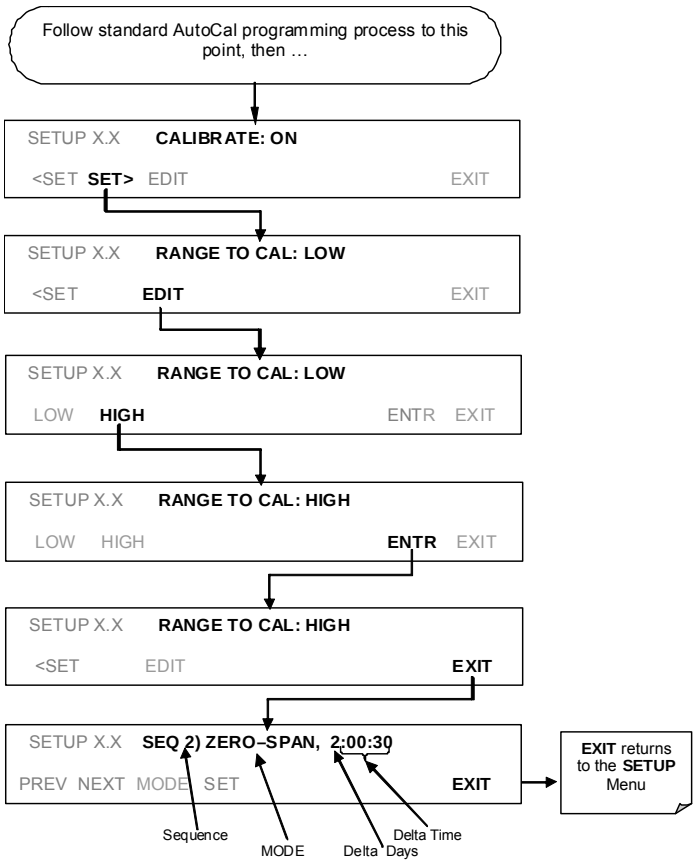

6.9.2. AUTOCAL OF INSTRUMENTS IN MULTIGAS MEASUREMENT MODE

If the analyzer is being operated in multigas measurement mode, auto cal can only be programmed to calibrate the instrument with one of the available gases.

NOTE

Make sure that the gas for which the AutoCal sequence has been programmed is being supplied to the analyzer at the time the autocal program initiates.

If the wrong gas is being supplied to the instrument, the analyzer will be mis-calibrated.

If the instrument is in multigas measurement mode and the **SNGL** reporting range mode is selected, the AutoCal sequence is programmed as described above. If the reporting range of the T101 must is set for either **IND** or **AUTO.** the gas type and range to be measured must be specified. This parameter appears at the end of the programming sequences after the **CALIBRATE: ON/OFF** parameter is set. For example:

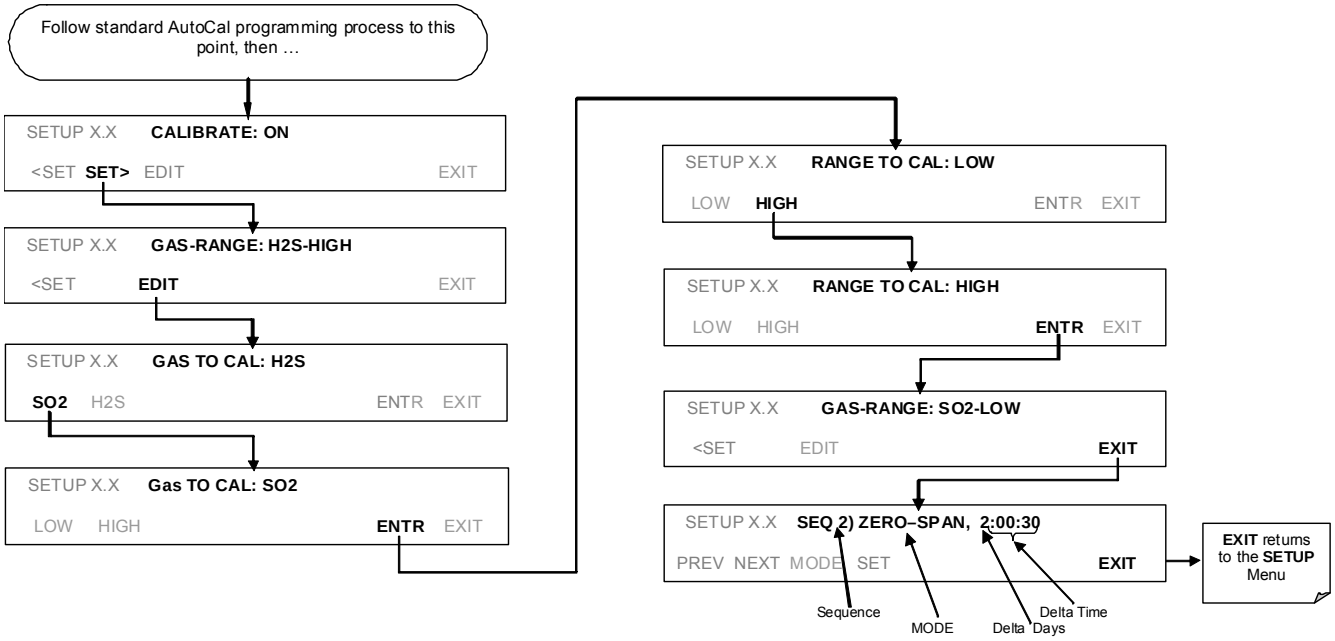

6.10. CALIBRATION QUALITY

After completing one of the calibration procedures described above, it is important to evaluate the analyzer's calibration slope and offset parameters. These values describe the linear response curve of the analyzer. The values for these terms, both individually and relative to each other, indicate the quality of the calibration. To perform this quality evaluation, you will need to record the values of both test functions (Section 4.2.1 or Appendix A-3), all of which are automatically stored in the DAS channel **CALDAT** for data analysis, documentation and archival.

Make sure that these parameters are within the limits listed in Table 6-5.

Table 6-5. Example Auto-Cal Sequence

FUNCTION	MINIMUM VALUE	OPTIMUM VALUE	MAXIMUM VALUE
H2S SLOPE[1]	-0.700	1.000	1.300
H2S OFFS[1]	-50.0 mV	<100	250.0 mV
These values should not be significantly different from the values recorded on the Teledyne API *Final Test and Validation Data* sheet that was shipped with your instrument. If they are, refer to the troubleshooting Section 9.			
[1] Shown as they appear when analyzer is in H_2S mode. In SO_2 mode they appear as **SO2 OFFS** & **SO2 SLOPE**. In multigas mode, both versions are listed and should be checked			

This page intentionally left blank.

7. EPA PROTOCOL CALIBRATION

7.1. CALIBRATION REQUIREMENTS

When configured for SO_2 measurement mode or multigas measurement mode, the T101 may be used for EPA SLAMS monitoring. In these cases it must be calibrated in accordance with the instructions in this section.

At the writing of this manual there is no EPA requirements for the monitoring of H_2S or published H_2S calibration protocols, therefore these instruction only discuss the calibration of the SO_2 measurement feature.

In order to insure that high quality, accurate measurements are obtained at all times, the T101 must be calibrated prior to use. A quality assurance program centered on this aspect and including attention to the built-in warning features of the T101, periodic inspection, regular zero/span checks and routine maintenance is paramount to achieving this.

In order to have a better understanding of the factors involved in assuring continuous and reliable information from the T101, it is strongly recommended that Publication No. PB 273-518 Quality Assurance Handbook for Air Pollution Measurement Systems (abbreviated, Q.A. Handbook) be purchased from the NTIS (phone 703-605-6000). Special attention should be paid to Section 2.9 of the handbook which deals with fluorescence based SO_2 analyzers and upon which most of this section is based. Specific regulations regarding the use and operation of ambient hydrogen sulfide analyzers can be found in 40 CFR 50 and 40 CFR 58. Both publications are available from the U.S. Government Printing Office (phone 202-512-0327).

7.1.1. CALIBRATION OF EQUIPMENT

In general, calibration is the process of adjusting the gain and offset of the T101 against some recognized standard. The reliability and usefulness of all data derived from any analyzer depends primarily upon its state of calibration. In this section the term dynamic calibration is used to express a multipoint check against known standards and involves introducing gas samples of known concentration into the instrument in order to adjust the instrument to a predetermined sensitivity and to produce a calibration relationship. This relationship is derived from the instrumental response to successive samples of different known concentrations. As a minimum, three reference points and a zero point are recommended to define this relationship. The true values of the calibration gas must be traceable to NIST-SRM's See Table 7.1.

All monitoring instrument systems are subject to some drift and variation in internal parameters and cannot be expected to maintain accurate calibration over long periods of

time. Therefore, it is necessary to dynamically check the calibration relationship on a predetermined schedule. Zero and span checks must be used to document that the data remains within control limits. These checks are also used in data reduction and validation. Table 7-3 summarizes the initial quality assurance activities for calibrating equipment. Table 7-2 is a matrix for the actual dynamic calibration procedure.

Calibrations should be carried out at the field monitoring site. The Analyzer should be in operation for at least several hours (preferably overnight) before calibration so that it is fully warmed up and its operation has stabilized. During the calibration, the T101 should be in the CAL mode, and therefore sample the test atmosphere through all components used during normal ambient sampling and through as much of the ambient air inlet system as is practicable. If the Instrument will be used on more than one range (i.e. IND or AUTO ranges), it should be calibrated separately on each applicable range. Calibration documentation should be maintained with each analyzer and also in a central backup file.

Table 7-1. Activity Matrix for Calibration Equipment & Supplies

EQUIPMENT/SUPPLIES	ACCEPTANCE LIMITS	FREQUENCY AND METHOD OF MEASUREMENT	ACTION IF REQUIREMENTS ARE NOT MET
Recorder	Compatible with output signal of analyzer; min. chart width of 150 mm (6 in) is recommended	Check upon receipt	Return equipment to supplier
Sample Line And Manifold	Constructed of PTFE or glass	Check upon receipt	Return equipment to supplier
Calibration Equipment	Meets guidelines of reference 1 and Section 2.3.2 (Q.A. Handbook)	See Section 2.3.9 (Q.A. Handbook)	Return equipment/ supplies to supplier or take corrective action
Working Standard SO_2 Cylinder Gas Or SO_2 Permeation Tube	Traceable to NIST-SRM meets limits in traceability protocol for accuracy and stability (Section 2.0.7, Q.A. Handbook)	Analyzed against NIST-SRM; see protocol in Section 2.0.7, Q.A. Handbook	Obtain new working standard and check for traceability
Zero Air	Clean dry ambient air, free of contaminants that cause detectable response with the SO_2 analyzer.	See Section 2.9.2 (Q.A. Handbook)	Obtain air from another source or regenerate.
Record Form	Develop standard forms	N/A	Revise forms as appropriate
Audit Equipment	Must not be the same as used for calibration	System must be checked out against known standards	Locate problem and correct or return to supplier

Table 7-2. Activity Matrix for Calibration Procedure

EQUIPMENT/ SUPPLIES	ACCEPTANCE LIMITS	FREQUENCY AND METHOD OF MEASUREMENT	ACTION IF REQUIREMENTS ARE NOT MET
Calibration Gases	NIST traceable	Assayed against an NIST-SRM semi-annually, Sec. 2.0.7, (Q.A. Handbook)	Working gas standard is unstable, and/or measurement method is out of control; take corrective action such as obtaining new calibration gas.
Dilution Gas	Zero air, free of contaminants	See Section 2.9.2 (Q.A. Manual)	Return to supplier or take appropriate action with generation system
Multi-Point Calibration	Use calibration procedure in Section 2.2 (Q.A. Handbook); also Federal Register	Perform at least once every quarter or anytime a level span check indicates a discrepancy, or after maintenance which may affect the calibration; Section 2.5 (Q.A. Manual)	Repeat the calibration

7.1.2. DATA RECORDING DEVICE

Either a strip chart recorder, data acquisition system, digital data acquisition system should be used to record the data from the Mode; T101 RS-232 port or analog outputs. If analog readings are being used, the response of that system should be checked against a NIST referenced voltage source or meter. Data recording device should be capable of bi-polar operation so that negative readings can be recorded.

7.1.3. RECOMMENDED STANDARDS FOR ESTABLISHING TRACEABILITY

To assure data of desired quality, two considerations are essential: (1) the measurement process must be in statistical control at the time of the measurement and (2) the systematic errors, when combined with the random variation in the measurement process, must result in a suitably small uncertainty.

Evidence of good quality data includes documentation of the quality control checks and the independent audits of the measurement process by recording data on specific forms or on a quality control chart and by using materials, instruments, and measurement procedures that can be traced to appropriate standards of reference. To establish traceability, data must be obtained routinely by repeat measurements of standard reference samples (primary, secondary, and/or working standards). More specifically, working calibration standards must be traceable to standards of higher accuracy, such as those listed in Table 7-1.

Cylinders of working gas traceable to NIST-SRM's (called EPA Protocol Calibration Gas) are also commercially available (from sources such as Scott Specialty Gases, etc.).

7.1.4. EPA CALIBRATION USING PERMEATION TUBES

Teledyne API does not recommend the use of permeation tubes as a source of span gas for EPA protocol calibration operations.

7.1.5. CALIBRATION FREQUENCY

To ensure accurate measurements of the SO_2 concentrations, calibrate the analyzer at the time of installation, and re-calibrate it:

- No later than three months after the most recent calibration or performance audit which indicated that the analyzer calibration was found to be acceptable.
- An interruption of more than a few days in analyzer operation.
- Any repairs which might affect its calibration.
- Physical relocation of the analyzer.
- Any other indication (including excessive zero or span drift) of possible significant inaccuracy of the analyzer.

Following any of the activities listed above, the zero and span should be checked to determine if a calibration is necessary. If the analyzer zero and span drifts exceed locally established calibration units or the calibration limits in Section 2.0.9, Subsection 9.1.3 (Q.A. Handbook), a calibration should be performed.

7.1.6. RECORD KEEPING

Record keeping is a critical part of all quality assurance programs. Standard forms similar to those that appear in this manual should be developed for individual programs. Three things to consider in the development of record forms are:

- Does the form serve a necessary function?
- Is the documentation complete?
- Will the forms be filed in such a manner that they can easily be retrieved when needed?

7.1.7. SUMMARY OF QUALITY ASSURANCE CHECKS

The following items should be checked on a regularly scheduled basis to assure high quality data from the T101. See Table 7-3 for a summary of activities. Also the QA Handbook should be checked for specific procedures.

Table 7-3. Activity Matrix

CHARACTERISTIC	ACCEPTANCE LIMITS	FREQUENCY AND METHOD OF MEASUREMENT	ACTION IF REQUIREMENTS ARE NOT MET
Shelter Temperature	Mean temperature between 22°C and 28°C (72° and 82°F), daily fluctuations not greater than ±2°C	Check thermograph chart weekly for variations greater than ±2°C (4°F)	Mark strip chart for the affected time period Repair or adjust temperature control
Sample Introduction System	No moisture, foreign material, leaks, obstructions; sample line connected to manifold	Weekly visual inspection	Clean, repair, or replace as needed
Recorder	Adequate ink & paper Legible ink traces Correct chart speed and range Correct time	Weekly visual inspection	Replenish ink and paper supply Adjust time to agree with clock; note on chart
Analyzer Operational Settings	TEST measurements at nominal values 2. T101 in SAMPLE mode	Weekly visual inspection	Adjust or repair as needed
Analyzer Operational Check	Zero and span within tolerance limits as described in Section. 9.1.3 of Sec. 2.0.9 (Q.A. Handbook)	Level 1 zero/span every 2 weeks; Level 2 between Level 1 checks at frequency desired analyzer by user	Find source of error and repair After corrective action, re-calibrate analyzer
Precision Check	Assess precision as described in Sec. 2.0.8 and Section. 3.4.3 (Ibid.)	Every 2 weeks, Section. 3.4.3 (Ibid.)	Calc, report precision, Sec. 2.0.8 (Ibid.)

7.2. LEVEL 1 CALIBRATIONS VERSUS LEVEL 2 CHECKS

Essential to quality assurance are scheduled checks for verifying the operational status of the monitoring system. The operator should visit the site at least once each week. It is recommended Level 1 zero and span check conducted on the analyzer every two weeks. Level 2 zero and span checks should be conducted at a frequency desired by the user. Definitions of these terms are given in Table 7-4.

In addition, an independent precision check between 0.08 and 0.10 ppm must be carried out at least once every two weeks. Table 7-3 summarizes the quality assurance activities for routine operations. A discussion of each activity appears in the following sections.

To provide for documentation and accountability of activities, a checklist should be compiled and then filled out by the field operator as each activity is completed.

Table 7-4. Definition of Level 1 and Level 2 Zero and Span Checks

(from Section 2.0.9 of Q.A. Handbook for Air Pollution Measurement Systems)

LEVEL 1 ZERO AND SPAN CALIBRATION	LEVEL 2 ZERO AND SPAN CHECK
A Level 1 zero and span calibration is a simplified, two-point analyzer calibration used when analyzer linearity does not need to be checked or verified. (Sometimes when no adjustments are made to the analyzer, the Level 1 calibration may be called a zero/span check, in which case it must not be confused with a Level 2 zero/span check.) Since most analyzers have a reliably linear or near-linear output response with concentration, they can be adequately calibrated with only two concentration standards (two-point concentration). Furthermore, one of the standards may be zero concentration, which is relatively easily obtained and need not be certified. Hence, only one certified concentration standard is needed for the two-point (Level 1) zero and span calibration. Although lacking the advantages of the multipoint calibration, the two-point zero and span calibration--because of its simplicity--can be (and should be) carried out much more frequently. Also, two-point calibrations are easily automated. Frequency checks or updating of the calibration relationship with a two-point zero and span calibration improves the quality of the monitoring data by helping to keep the calibration relationship more closely matched to any changes (drifts) in the analyzer response.	A Level 2 zero and span check is an "unofficial" check of an analyzer's response. It may include dynamic checks made with uncertified test concentrations, artificial stimulation of the analyzer's detector, electronic or other types of checks of a portion of the analyzer, etc. Level 2 zero and span checks are not to be used as a basis for analyzer zero or span adjustments, calibration updates, or adjustment of ambient data. They are intended as quick, convenient checks to be used between zero and span calibrations to check for possible analyzer malfunction or calibration drift. Whenever a Level 2 zero or span check indicates a possible calibration problem, a Level 1 zero and span (or multipoint) calibration should be carried out before any corrective action is taken. If a Level 2 zero and span check is to be used in the quality control program, a "reference response" for the check should be obtained immediately following a zero and span (or multipoint) calibration while the analyzer's calibration is accurately known. Subsequent Level 2 check responses should then be compared to the most recent reference response to determine if a change in response has occurred. For automatic Level 2 zero and span checks, the first scheduled check following the calibration should be used for the reference response. It should be kept in mind that any Level 2 check that involves only part of the analyzer's system cannot provide information about the portions of the system not checked and therefore cannot be used as a verification of the overall analyzer calibration.

7.3. ZERO AND SPAN CHECKS

A system of Level 1 and Level 2 zero span checks (see Table 8-4) is recommended. These checks must be conducted in accordance with the specific guidance given in Subsection 9.1 of Section 2.0.9 (Q.A. Handbook). It is recommended Level 1 zero and span checks conducted every two weeks. Level 2 checks should be conducted in between the Level 1 checks at a frequency desired by the user. Span concentrations for both levels should be between 70 and 90% of the measurement range.

Zero and span data are to be used to:

- Provide data to allow analyzer adjustment for zero and span drift;
- Provide a decision point on when to calibrate the analyzer;
- Provide a decision point on invalidation of monitoring data.

Items 1 and 2 are described in detail in Subsection 9.1.3 of Section 2.0.9 (Q.A. Handbook). Item 3 is described in Subsection 9.1.4 of the same section.

Refer to the Troubleshooting Section 10 of this manual if the instrument is not within the allowed variations.

7.3.1. ZERO/SPAN CHECK PROCEDURES

The Zero and Span calibration can be checked a variety of different ways. They include:

Manual Zero/Span Check - Zero and Span can be checked from the front panel keyboard. Follow the procedures described in Section 6.3 and6-6 of this manual using calibrated SO_2 span gas (see Table 6-1) only.

Automatic Zero/Span Checks - After the appropriate setup, Z/S checks can be performed automatically every night. Follow the procedure described in Section 6.9 of this manual using calibrated SO_2 span gas (see Table 6-1).

Zero/Span checks via remote contact closure = Zero/Span checks can be initiated via remote contact closures on the rear panel. Follow the procedures described Section 6.7.1 of this manual using calibrated SO_2 span gas (see Table 6-1).

Zero/Span via RS-232 port - Z/S checks can be controlled via the RS-232 port.

7.4. PRECISIONS CALIBRATION PROCEDURES AND CHECKS

Calibration must be performed with a calibrator that meets all conditions specified in Subsection 2.9.2 (Q.A. Handbook). The user should be sure that all flow meters are calibrated under the conditions of use against a reliable standard. All volumetric flow rates should be corrected to 25°C (77°F) and 760mm (29.92in) Hg. Make sure the calibration system can supply the range of the concentration at a sufficient flow over the whole range of concentration that will be encountered during calibration.

All operational adjustments to the T101 should be completed prior to the calibration. The following software features must be set into the desired state before calibration.

- Single range selection. See Section 4.7.4 of this manual. If the instrument will be used more than one range, it should be calibrated separately on each applicable range.
- Automatic temperature/pressure compensation.
- Alternate units, make sure ppb units are selected for EPA monitoring. See Section 4.7.7.

The analyzer should be calibrated on the same range for monitoring. If the **AUTO** range mode is selected, the highest of the ranges will result in the most accurate calibration, and should be used.

7.4.1. PRECISION CALIBRATION

To perform a precision calibration, the instrument set up:

- Input sources of zero air and calibrated SO_2 span gas (see Table 6-1).
- Follow the procedures described in Section 6.2 for analyzers with no valve options or with an IZS valve option (Do not use the method defined in Section 6.7).
- Follow the procedures described in Section 6.5 for analyzers with Z/S options installed.

7.4.2. PRECISION CHECK

A periodic check is used to assess the data for precision. A one-point precision check must be carried out at least once every 2 weeks on each analyzer at an SO_2 concentration between 0.08 and 0.10 ppm. The analyzer must be operated in its normal sampling mode, and the precision test gas must pass through all filters, scrubbers, conditioners, and other components used during normal ambient sampling. The standards from which precision check test concentrations are obtained must be traceable to NIST-SRM (see Table 7-1). Those standards used for calibration or auditing may be used.

To perform a precision check, the instrument set up; sources of zero air and SO_2 span gas and procedures should conform to those described in Section 6.3 for analyzers with no valve options or with an IZS valve option installed and Section 6.6 for analyzers with Z/S options installed with the following exception:

- Connect the analyzer to a precision gas that has an SO_2 concentration between 0.08 and 0.10 ppm. If a precision check is made in conjunction with a zero/span check, it must be made prior to any zero or span adjustments.

Record this value. Information from the check procedure is used to assess the precision of the monitoring data; see 40 CFR 58 for procedures for calculating and reporting precision.

7.5. DYNAMIC MULTIPOINT SPAN CALIBRATION

Dynamic calibration involves introducing gas samples of known concentrations to an instrument in order to record the instrument's performance at a predetermined sensitivity and to derive a calibration relationship. A minimum of three reference points and one zero point uniformly spaced covering 0 to 90 percent of the operating range are recommended to define this relationship.

The analyzer's recorded response is compared with the known concentration to derive the calibration relationship.

To perform a precision check, the instrument set up, sources of zero air and sample gas should conform to those described in Section 6.2.

Follow the procedures described in section 6.2 for calibrating the zero points.

For each mid point:

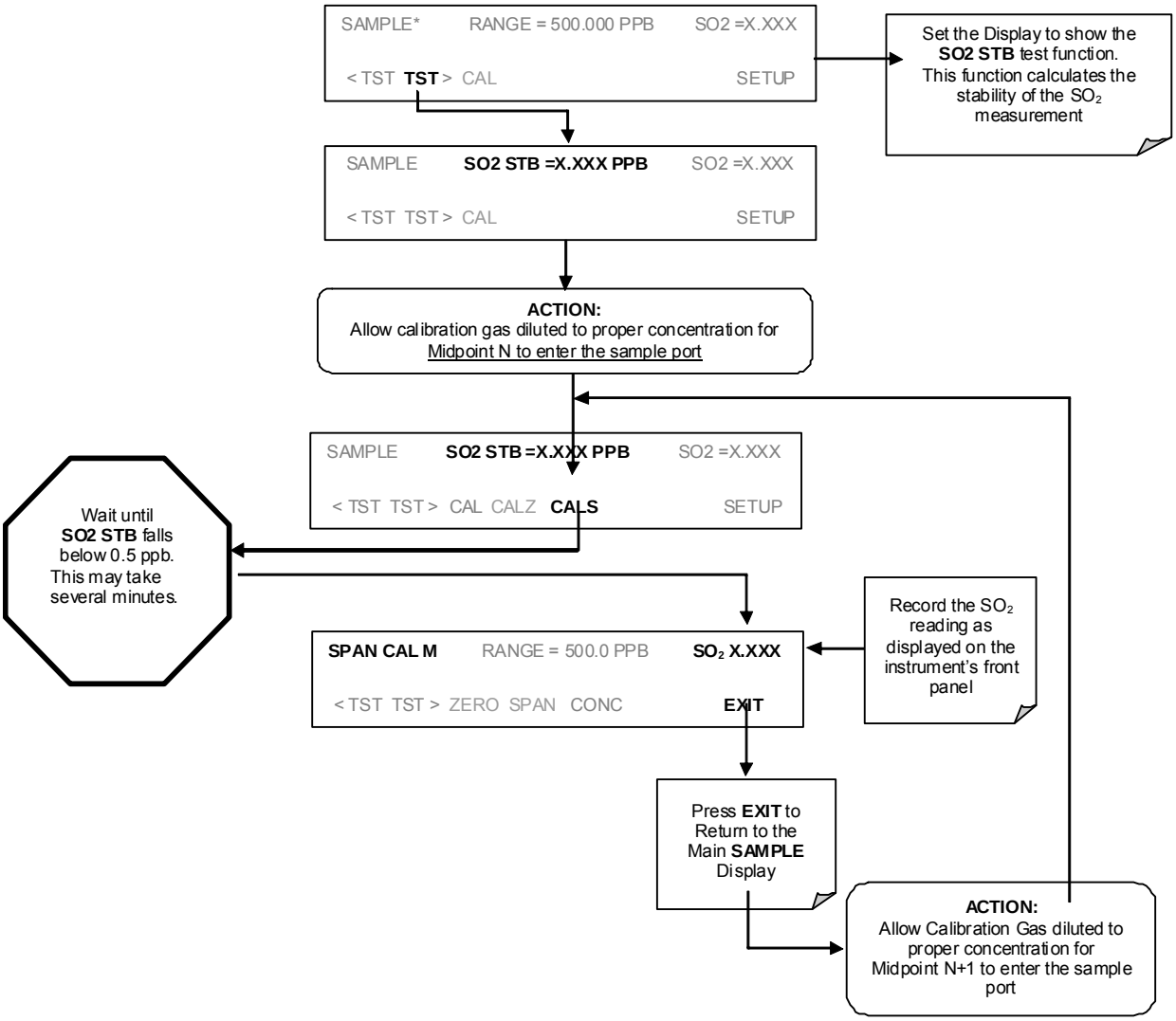

7.6. SPECIAL CALIBRATION REQUIREMENTS FOR INDEPENDENT RANGE OR AUTO RANGE

If Independent Range or Auto Range is selected, then it should be calibrated for both Range1 and Range2 separately.

For zero and span point calibration, follow the procedure described in Section 6.2. Repeat the procedure for both the high and low Ranges

7.7. REFERENCES

1. Environmental Protection Agency, Title 40, Code of Federal Regulations, Part 50, Appendix A, Section 10.3.
2. Quality Assurance Handbook for Air Pollution Measurement Systems - Volume II, Ambient Air Specific Methods, EPA-600/4-77-027a, 1977.
3. Catalog of NBS Standard Reference Materials. NBS Special Publication 260, 1975-76 Edition. U.S. Department of Commerce, NBS. Washington, D.C. June 1975. (Tel: 301-975-6776 for ordering the catalog)
4. Quality Assurance Handbook for Air Pollution Measurement Systems - Volume I, Principles. EPA-600/9-76-005. March 1976.

8. INSTRUMENT MAINTENANCE

Predictive diagnostic functions including data acquisition, failure warnings and alarms built into the analyzer allow the user to determine when repairs are necessary without performing unnecessary, preventative maintenance procedures. There is, however, a minimal number of simple procedures that, when performed regularly, will ensure that the analyzer continues to operate accurately and reliably over its lifetime. Repair and troubleshooting procedures are covered in Section 8 and Section 9 of this manual.

8.1. MAINTENANCE SCHEDULE

Table 8-1 shows a typical maintenance schedule for the analyzer. Please note that in certain environments (i.e. dusty, very high ambient pollutant levels) some maintenance procedures may need to be performed more often than shown.

NOTE

A span and zero calibration check must be performed following some of the maintenance procedures listed below.

See Sections 6.3, 6.6 and 6.9 for instructions on performing checks.

CAUTION

Risk of electrical shock. Disconnect power before performing any operations that require entry into the interior of the analyzer.

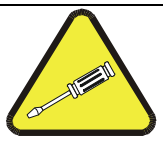

NOTE

The operations outlined in this Section must be performed by qualified maintenance personnel only.

NOTE

The front panel of the analyzer is hinged at the bottom and may be opened to gain access to various components mounted on the panel itself or located near the front of the instrument (such as the particulate filter).

A locking screw located at the top center of the panel and two fasteners located in the upper right and left corners of the panel serve to lock it shut.

This page intentionally left blank.

Table 8-1 T101 Preventive Maintenance Schedule

ITEM	ACTION	FREQUENCY	CAL CHECK	MANUAL SECTION	DATE PERFORMED						
SO_2 scrubber	Replace	As required	Yes	8.3.3							
$H_2S \rightarrow SO_2$ Converter Catalyst	Replace	As required	Yes	8.3.5							
[1]Particulate filter	Change particle filter	Weekly	No	8.3.1							
Verify test functions	Review and evaluate	Weekly	No	Appendix C							
Zero/span check	Evaluate offset and slope	Weekly	--	6.3, 6.6, 6.9							
[1]Zero/span calibration	Zero and span calibration	Every 3 months	--	6.2, 6.4, 6.5, 6.7, 6.8							
[1]External zero air scrubber (optional)	Exchange chemical	Every 3 months	No	8.3.4							
[1]Perform flow check	Check Flow	Every 6 Months	No	9.5.2							
[1]Critical flow orifice & sintered filters	Replace	Annually	Yes	8.3.7							
Internal IZS Permeation Tube	Replace	As required	YES	8.3.2							
Perform pneumatic leak check	Verify Leak Tight	Annually or after repairs involving pneumatics	Yes	9.5.1							
[2]Pump diaphragm	Replace	At least Every 2 years or if **PRES** is ≥ 33.00 in-Hg-A	Yes	See instruction in diaphragm kit							
PMT sensor hardware calibration	Low-level hardware calibration	On PMT/ preamp changes if 0.7 < **SLOPE** or **SLOPE >**1.3	Yes	9.6.4							

[1] These Items are required to maintain full warranty; all other items are strongly recommended.
[2] A pump rebuild kit is available from Teledyne API Technical Support including all instructions and required parts (see Appendix B for part numbers).

This page intentionally left blank.

8.2. PREDICTIVE DIAGNOSTICS

The analyzer's test functions can be used to predict failures by looking at trends in their values. The current value of these functions can be viewed via the front panel, recorded via the DAS system (see Section 4.8) or even downloaded via the internet from a remote location using Teledyne API's APICOM control software can be used to download and review these data (see Section 5.1.2.9).

Table 8-2 Predictive Uses for Test Functions

TEST FUNCTION	DAS FUNCTION	CONDITION	BEHAVIOR		INTERPRETATION
			EXPECTED	ACTUAL	
H2S STB[1]	N/A	Zero Gas	≤ 1 ppb with zero air	Increasing	• Pneumatic Leaks – instrument & sample system • Detector deteriorating
PRES	**SMPPRS**	sample gas	Constant within atmospheric changes	Fluctuating	• Developing leak in pneumatic system
				Slowly increasing	• Flow path is clogging up. • Developing leak in pneumatic system to vacuum - Check critical flow orifice & sintered filter.
				Slowly decreasing	• Replace particulate filter
DRK PMT	**DRKPMT**	PMT output when UV Lamp shutter closed	Constant within ±20 of check-out value	Significantly increasing	• PMT cooler failure • Shutter Failure
SO_2 Concentration	**CONC1**	At span with IZS option installed	Constant response from day to day	Decreasing over time	• Change in instrument response
					• Degradation of IZS permeation tube
		Standard configuration at span	stable for constant concentration	Decreasing over time	• Drift of instrument response; UV Lamp output is excessively low; clean RCEL window
SAMP FL	**SMPFLW**	Standard Operation	Stable	Slowly Decreasing	• Flow path is clogging up. - Check critical flow orifice & sintered filter. - Replace particulate filter
				Fluctuating	• Leak in gas flow path.
LAMP RATIO	**LAMPR**	Standard Operation	Stable and near 100%	Fluctuating or Slowly increasing	• UV detector wearing out • UV source Filter developing pin holes
				Slowly decreasing	• UV detector wearing out • Opaque oxides building up on UV source Filter • UV lamp aging
H2S OFFS[1]	**OFSET1**	During Zero Cal	Stable	Slowly increasing or decreasing	• Bad PMT • Failed HVPS • Leak in sample gas flow • Contamination in zero gas source.
H2S SLOPE[1]	**SLOPE1**	During Span Cal	Stable	Slowly increasing or decreasing	• UV lamp aging • UV detector wearing out • Leak in Sample gas or calibration gas flow path • Deterioration / contamination of calibration gas source(s)

[1] Shown as they appear when analyzer is in H_2S mode. In SO_2 mode appear as SO2 OFFS & SO2 SLOPE. In multigas mode, both versions appear.

8.3. MAINTENANCE PROCEDURES

The following procedures need to be performed regularly as part of the standard maintenance of the Model T101.

8.3.1. CHANGING THE SAMPLE PARTICULATE FILTER

The particulate filter should be inspected often for signs of plugging or excess dirt. It should be replaced according to the service interval in Table 8-1 even without obvious signs of dirt. Filters with 1 and 5 µm pore size can clog up while retaining a clean look. We recommend handling the filter and the wetted surfaces of the filter housing with gloves and tweezers. Do not touch any part of the housing, filter element, PTFE retaining ring, glass cover and the O-ring with bare hands.

To change the filter according to the service interval in Table 8-1:

1. Turn OFF the analyzer to prevent drawing debris into the sample line.
2. Open the T101's hinged front panel and unscrew the knurled retaining ring of the filter assembly.

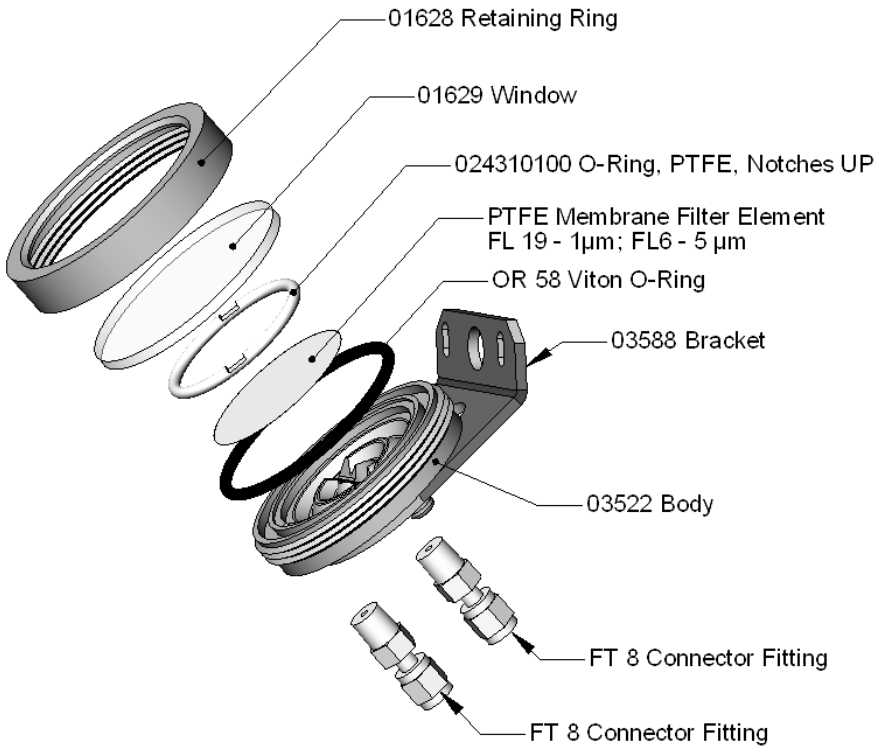

Figure 8-1. Sample Particulate Filter Assembly

3. Carefully remove the retaining ring, glass window, PTFE O-ring and filter element.
4. Replace the filter element, carefully centering it in the bottom of the holder.
5. Re-install the PTFE O-ring with the notches facing up, the glass cover, then screw on the hold-down ring and hand-tighten the assembly. Inspect the (visible) seal between the edge of the glass window and the O-ring to assure proper gas tightness.
6. Re-start the analyzer.

8.3.2. CHANGING THE IZS PERMEATION TUBE

1. Turn off the analyzer, unplug the power cord and remove the cover.
2. Locate the IZS oven in the rear left of the analyzer.
3. Remove the top layer of insulation if necessary.
4. Unscrew the black aluminum cover of the IZS oven (3 screws) using a medium Phillips-head screw driver. Leave the fittings and tubing connected to the cover.
5. Remove the old permeation tube if necessary and replace it with the new tube. Make sure that the tube is placed into the larger of two holes and that the open permeation end of the tube (plastic) is facing up.
6. Re-attach the cover with three screws and make sure that the sealing O-ring is properly in place and that the three screws are tightened evenly.
7. Replace the analyzer cover, plug the power cord back in and turn on the analyzer.
8. Carry out an IZS span check to see if the new permeation device works properly. The permeation rate may need several days to stabilize.

WARNING

Do not leave instrument turned off for more than 8 hours without removing the permeation tube. Do not ship the instrument without removing the permeation tube. The tube continues to emit gas, even at room temperature and will contaminate the entire instrument.

8.3.3. MAINTAINING THE SO_2 SCRUBBER

The SO_2 scrubber of your T101 utilizes a consumable compound to absorb SO_2 form the sample gas that must be replaced periodically in order for the analyzer to continue measuring H_2S accurately and reliability.

This material is capable of efficiently scrubbing SO_2 for up to 1000 ppm/hours. This means that if the SO_2 content of the sample gas is typically around 100 ppb, the scrubber will function for approximately 10 000 hours, a little over 13 months. If, however, the typical ambient SO_2 level of the sample gas is 250 ppb, the scrubber would only last for approximately 4000 hours or about 5 ½ months.

8.3.3.1. Predicting When the SO_2 Scrubber Should Be Replaced.

To determine how long the SO_2 scrubber will operate efficiently:

1. Measure the amount of SO_2 in the sample gas.
   - If your T101 has the multigas measurement options activated, this can be done by following instructions found in Section 4.5.1 and selecting **MEASURE MODE = SO_2**.
   - Let the analyzer operate for 30 minutes, then note the SO_2 concentration.
2. Divide 1 000 by the SO_2 concentration.

EXAMPLE: If the SO_2 concentration is 125 ppb:

Operational hours = 1000 ppm/hr ÷ 0.125 ppm

Operational hours = 1,000,000 ppb/hr ÷ 125 ppb

Operational hours = 8000 hrs

8.3.3.2. Checking the Function of the SO_2 Scrubber

To check to see if your SO_2 scrubber is operating properly:

1. With the analyzer set of H_2S measurement mode, introduce gas mixture into the sample gas stream that includes SO_2 at a concentration of at least 20% of the reporting range currently selected (see Section 4.4.4.3). For example, if the analyzer is set for a Single Range & 500 ppb, a concentration of 1000 ppb would be appropriate.
2. An increase of more than 2% in the H_2S reading is an indication that the efficiency of the scrubber is decreasing to the point that the absorbing material should be replaced.

8.3.3.3. Changing the SO_2 Scrubber Material

1. Input zero air for 5 minutes
2. Turn off analyzer
3. Locates the SO_2 scrubber cartridge in the front of the analyzer, looks like a big white cylinder (See Figure 3-9).
4. Undo the two 1/8 inch fittings on the top of the scrubber
5. Remove the two screws holding the scrubber to the instrument chassis and remove the scrubber
6. Take the two Teflon fitting off the instrument.
7. Empty the SO_2 scrubbing material in to a hazmat bin
8. Fill each side of the scrubber with new SO_2 scrubber material until it is ½ an inch from the bottom of the thread lines so about ½ inches from the top of the scrubber, do not fill it too high or the fitting will crush the material.
9. Remove the Teflon tape from both of the removed fittings, and re-tape them with new Teflon tape.
10. Install both fittings back onto the scrubber.
11. Put the scrubber back into the analyzer and replace the two screws on the bottom.
12. Screw the two 1/8 fittings back onto the top of the scrubber, they can be hooked up either way.
13. Return analyzer to normal operation

8.3.4. CHANGING THE EXTERNAL ZERO AIR SCRUBBER

The chemicals in the external scrubber need to be replaced periodically according to Table 9-1 or as needed. This procedure can be carried out while the instrument is running. Make sure that the analyzer is not in ZERO calibration mode.

1. Locate the scrubber on the outside rear panel. Figure 9-2 shows an exploded view of the scrubber assembly.

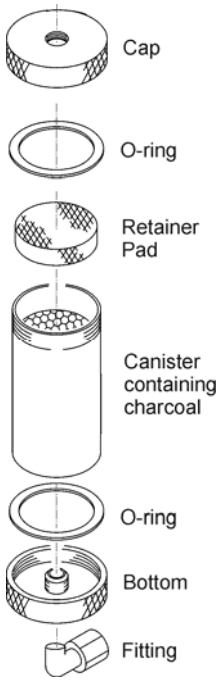

Figure 8-2. Charcoal Canister Assembly

2. Remove the old scrubber by disconnecting the 1/4” plastic tubing from the particle filter using 9/16” and 1/2" wrenches.
3. Remove the particle filter from the cartridge using 9/16” wrenches.
4. Unscrew the top of the scrubber canister and properly disposition the charcoal contents in accordance with local laws about discarding these chemicals. The rebuild kit (listed in Appendix B) comes with a Material and Safety Data Sheet, which contains more information on these chemicals.
5. Refill the scrubber canister with charcoal.
6. Place a retainer pad over the charcoal, and then close the cartridge with the screw-top cap.
7. Tighten the cap on the scrubber - hand-tight only.
8. Replace the DFU filter with a new unit and discard the old.
9. Replace the scrubber assembly into its clips on the rear panel.
10. Reconnect the plastic tubing to the fitting of the particle filter.
11. Adjust the scrubber cartridge such that it does not protrude above or below the analyzer in case the instrument is mounted in a rack. If necessary, squeeze the clips for a tighter grip on the cartridge.

8.3.5. MAINTAINING THE $H_2S \rightarrow SO_2$ CONVERTER

The catalyst contained in the $H_2S \rightarrow SO_2$ converter of your T101 must be replaced periodically in order for the analyzer to continue measuring H2S accurately and reliability.

This material is capable of efficiently converting H_2S into SO_2 for up to 6000 ppm/hours. This means that if the H_2S content of the sample gas is typically around 600 ppb, the scrubber will function for approximately 10 000 hours, a little over 13 months. If, however, the typical ambient H_2S level of the sample gas is 1000 ppb, the scrubber would only last for approximately 6000 hours or about 8 months.

8.3.5.1. Predicting When the Converter Catalyst Should Be Replaced.

To determine how long the $H_2S \rightarrow SO_2$ converter will operate efficiently:

1. Measure the amount of H_2S in the sample gas.
2. Divide 6000 by the H_2S concentration.

   EXAMPLE: If the H_2S concentration is 750 ppb:

   Operational hours= 6000 ppm/hr ÷ 0.75 ppm

   Operational hours= 6,00,000 ppb/hr ÷ 750 ppb

   Operational hours= 8000 hrs

8.3.5.2. Checking the Efficiency of the $H_2S \rightarrow SO_2$ Converter

To check to see if your $H_2S \rightarrow SO_2$ converter is operating properly:

1. Set the analyzer to SO_2 measurement mode (see Section 4.5.1).
2. Supply a gas with a known concentration of SO_2 to the sample gas inlet of the analyzer.
3. Wait until the analyzer's SO_2 concentration measurement stabilizes. This can be determined by setting the analyzer's display to show the **SO2 STB** test function (see Section 4.2.1) **SO2 STB** should be **0.5 ppb** or less before proceeding.
4. Record the stable SO_2 concentration
5. Set the analyzer to H_2S measurement mode (see Section 4.5.1).
6. Supply a gas with a known concentration of H_2S, equal to that of the SO_2 gas used in steps 2-4 above, to the sample gas inlet of the analyzer.
7. Wait until the analyzer's SO_2 concentration measurement stabilizes. This can be determined by setting the analyzer's display to show the **H2S STB** test function (see Section 4.2.1) **H2S STB** should be **0.5 ppb** or less before proceeding.
8. Record the stable H_2S concentration
9. Divide the H_2S concentration by the SO_2 concentration

   EXAMPLE: If the SO_2 and H_2S concentration of the two test gases used is 500 ppb:

   Measured SO_2 concentration = 499.1 ppb

   Measured H_2S concentration = 490.3 ppb

Converter Efficiency = 490.3 ÷ 499.1

Converter Efficiency = 0.982 (98.2%)

10. It is recommended that the $H_2S \rightarrow SO_2$ converter catalyst material be replaced if the converter efficiency falls below 96% or whatever efficiency rating is specified by local regulatory requirements.

8.3.5.3. Changing the $H_2S \rightarrow SO_2$ Converter Catalyst Material

The $H_2S \rightarrow SO_2$ converter is located in the center of the instrument, see Figure 3-5 for location, and Figure 8-3 for the assembly. The converter is designed for replacement of the cartridge only; the heater with built-in thermocouple can be reused.

- Turn off the analyzer power, remove the cover and allow the converter to cool.
- Remove the top lid of the converter as well as the top layers of the insulation until the converter cartridge can be seen.

CAUTION

The converter operates at 315° C. Severe burns can result if the assembly is not allowed to cool. Do not handle the assembly until it is at room temperature. This may take several hours.

- Remove the tube fittings from the converter.
- Disconnect the power and the thermocouple of the converter. Unscrew the grounding clamp of the power leads with a Phillips-head screw driver.
- Remove the converter assembly (cartridge and band heater) from the can. Make a note of the orientation of the tubes relative to the heater cartridge.
- Unscrew the band heater and loosen it, take out the old converter cartridge.

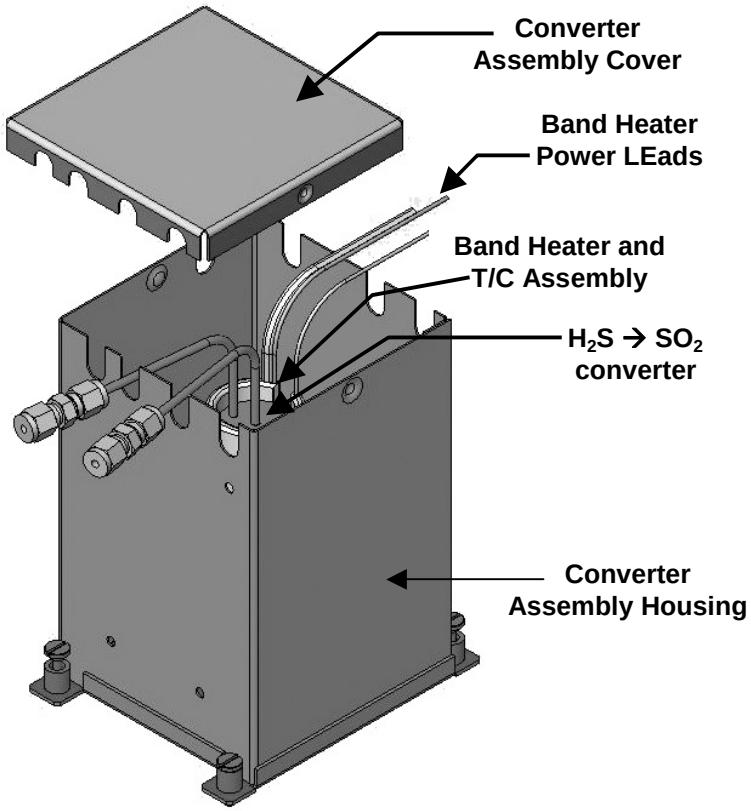

Figure 8-3. H2S - SO2 Converter Assembly

- Wrap the band heater around the new replacement cartridge and tighten the screws using a high-temperature anti-seize agent such as copper paste. Make sure to use proper alignment of the heater with respect to the converter tubes.
- Replace the converter assembly, route the cables through the holes in the housing and reconnect them properly. Reconnect the grounding clamp around the heater leads for safe operation.
- Re-attach the tube fittings to the converter and replace the insulation and cover.
- Replace the instrument cover and power up the analyzer.

8.3.6. CHECKING FOR LIGHT LEAKS

When re-assembled or operated improperly, the T101 can develop small leaks around the PMT, which let stray light from the analyzer surrounding into the PMT housing. To find such light leaks, follow the procedures below.

CAUTION

This procedure can only be carried out with the analyzer running and its cover removed. This procedure should only be carried out by qualified personnel.

1. Scroll the TEST functions to PMT.
2. Supply zero gas to the analyzer.
3. With the instrument still running, carefully remove the analyzer cover. Take extra care not to touch any of the inside wiring with the metal cover or your body. Do not drop screws or tools into a running analyzer!
4. Shine a powerful flashlight or portable incandescent light at the inlet and outlet fitting and at all of the joints of the sample chamber as well as around the PMT housing. The PMT value should not respond to the light, the PMT signal should remain steady within its usual noise.
5. If there is a PMT response to the external light, symmetrically tighten the sample chamber mounting screws or replace the 1/4" vacuum tubing with new, black PTFE tubing (this tubing will fade with time and become transparent). Often, light leaks are also caused by O-rings being left out of the assembly.
6. Carefully replace the analyzer cover.
7. If tubing or O-rings were changed, carry out a leak check (Section 9.5.1).

8.3.7. CHANGING THE CRITICAL FLOW ORIFICE

A critical flow orifice, located on the exhaust manifold maintains the proper flow rate of gas through the T101 analyzer. Refer to section 10.3.3.1 for a detailed description of its functionality and location. Despite the fact this device is protected by sintered stainless steel filters, it can, on occasion, clog, particularly if the instrument is operated without a sample filter or in an environment with very fine, sub-micron particle-size dust.

1. Turn off power to the instrument and vacuum pump.
2. Locate the critical flow orifice on the pressure sensor assembly (called out in Figure 8-4).
3. Disconnect the pneumatic line.
4. Unscrew the NPT fitting.

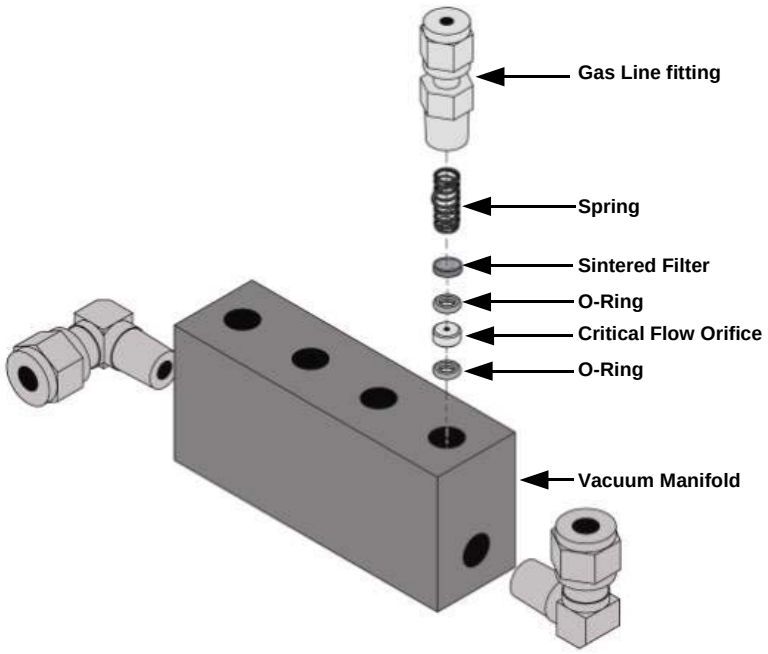

Figure 8-4. Critical Flow Orifice Assembly

5. Take out the components of the assembly: a spring, a sintered filter, two O-rings and the critical flow orifice.

   You may need to use a scribe or pressure from the vacuum port to get the parts out of the manifold.

6. Discard the two O-rings and the sintered filter.
7. Replace the critical flow orifice.
8. Let the part dry.
9. Re-assemble the parts as shown in Figure 8-4 using a new filter and o-rings.
10. Reinstall the NPT fitting and connect all tubing.
11. Power up the analyzer and allow it to warm up for 60 minutes.
8. Perform a leak check (refer to Section 9.5).

9. TROUBLESHOOTING & SERVICE

This section contains a variety of methods for identifying and solving performance problems with the analyzer.

CAUTION

The operations outlined in this Section must be performed by qualified maintenance personnel only.

CAUTION

Risk of electrical shock. Some operations need to be carried out with the analyzer open and running. Exercise caution to avoid electrical shocks and electrostatic or mechanical damage to the analyzer. Do not drop tools into the analyzer or leave those after your procedures. Do not shorten or touch electric connections with metallic tools while operating inside the analyzer. Use common sense when operating inside a running analyzer.

NOTE

The front panel of the analyzer is hinged at the bottom and may be opened to gain access to various components mounted on the panel itself or located near the front of the instrument (such as the particulate filter).

A locking screw located at the top center of the panel and two fasteners located in the upper right and left corners of the panel lock it shut (Figure 3-9).

9.1. GENERAL TROUBLESHOOTING

The analyzer has been designed so that problems can be rapidly detected, evaluated and repaired. During operation, the analyzer continuously performs diagnostic tests and provides the ability to evaluate its key operating parameters without disturbing monitoring operations.

A systematic approach to troubleshooting will generally consist of the following five steps:

- Note any warning messages and take corrective action as necessary.

- Examine the values of all TEST functions and compare them to factory values. Note any major deviations from the factory values and take corrective action.

- Use the internal electronic status LED's to determine whether the electronic communication channels are operating properly. Verify that the DC power supplies are operating properly by checking the voltage test points on the relay board. Note that the analyzer's DC power wiring is color-coded and these colors match the color of the corresponding test points on the relay board.

- Suspect a leak first! Technical Support data indicate that half of all problems are eventually traced to leaks in the pneumatic system of the analyzer, the source of zero air or span gases or the sample gas delivery system. Check for gas flow problems such as clogged or blocked internal/external gas lines, damaged seals, punctured gas lines, a damaged pump diaphragm, etc.

- Follow the procedures defined in Section 9.5 for confirming that the analyzer's basic components are working (power supplies, CPU, relay board, keyboard, PMT cooler, etc.). See Figure 3-8 for general layout of components and sub-assemblies in the analyzer. See the wiring interconnect drawing and interconnect list, see Appendix D.

9.1.1. FAULT DIAGNOSIS WITH WARNING MESSAGES

The most common and/or serious instrument failures will result in a warning message displayed on the front panel. Table 11-1 contains a list of warning messages, along with a list of possible faults that might be responsible for the warning condition.

It should be noted that if more than two or three warning messages occur at the same time, it is often an indication that some fundamental analyzer sub-system (power supply, relay board, motherboard) has failed rather than an indication of the specific failures referenced by the warnings. In this case, a combined-error analysis needs to be performed.

The analyzer will alert the user that a warning is active by flashing the FAULT LED and displaying the Warning message in the Param field along with the CLR button (press to clear Warning message). The MSG button displays if there is more than one warning in queue or if you are in the TEST menu and have not yet cleared the message. The following display/touchscreen examples provide an illustration of each:

(Fault LED lit, warning msg in Param field, CLR button active)

(Fault LED lit, Test menu active, MSG button replaces CLR button)

The analyzer also issues a message to the serial port(s).

To view or clear a warning message press:

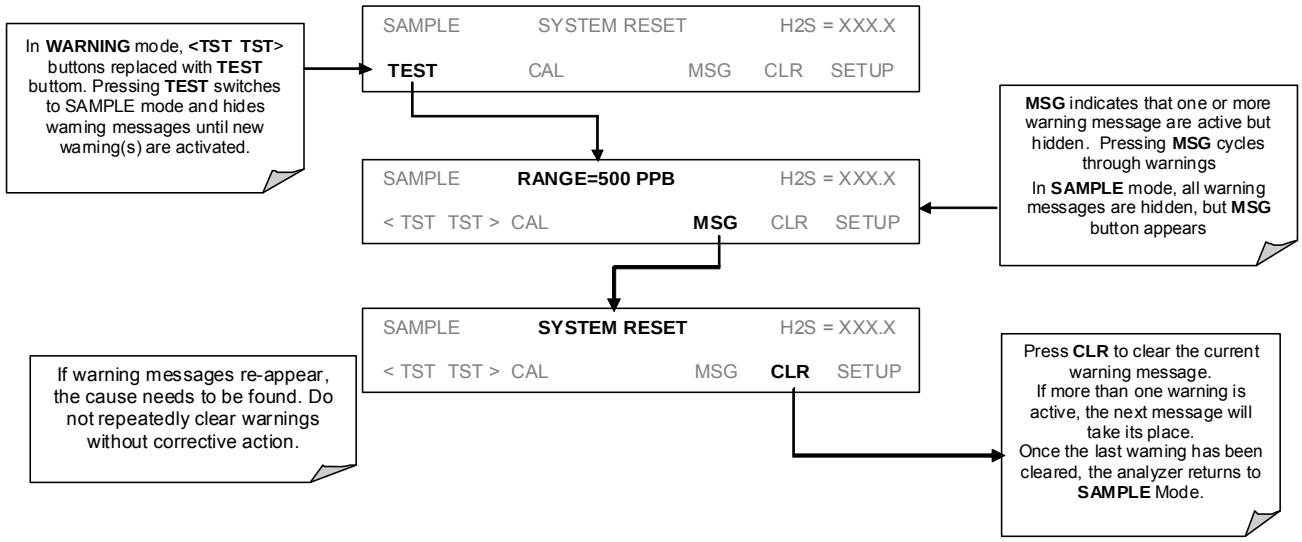

Figure 9-1. Viewing and Clearing Warning Messages

Table 9-1. Warning Messages - Indicated Failures

WARNING MESSAGE	FAULT CONDITION	POSSIBLE CAUSES
ANALOG CAL WARNING	The instrument's A/D circuitry or one of its analog outputs is not calibrated	A parameter for one of the analog outputs has been changed and the calibration routine was not re-run A/D circuitry failure on motherboard Other motherboard electro9nic failure
BOX TEMP WARNING	Box Temp is < 5 °C or > 48 °C.	NOTE: Box temperature typically runs ~7°c warmer than ambient temperature. Poor/blocked ventilation to the analyzer. Stopped exhaust-fan Ambient temperature outside of specified range
CANNOT DYN SPAN	Dynamic Span operation failed	Measured concentration value is too high or low. Concentration slope value to high or too low
CANNOT DYN ZERO	Dynamic Zero operation failed	Measured concentration value is too high. Concentration offset value to high.
CONFIG INITIALIZED	Configuration and Calibration data reset to original Factory state.	Failed disk on module User erased data
CONV TEMP WARNING	The temperature of the $H_2S \rightarrow SO_2$ catalytic converter is outside its optimal operating range.	Bad converter heater Bad converter temperature sensor Bad relay controlling the converter heater Entire relay board is malfunctioning I^2C buss malfunction
DARK CAL WARNING	The Dark Cal signal is higher than 100 mV.	Light leak in reaction cell Shutter solenoid is not functioning Failed relay board I^2C bus failure Loose connector/wiring PMT preamp board bad or out of cal
DATA INITIALIZED	Data Storage in DAS was erased	Failed disk on module User cleared data
HVPS WARNING	High voltage power supply output is <400 V or >900 V	High voltage power supply is bad High voltage power supply is out of cal A/D converter circuitry is bad

WARNING MESSAGE	FAULT CONDITION	POSSIBLE CAUSES
IZS TEMP WARNING	On units with IZS options installed: The permeation tube temperature is Sample chamber temperature is < 45°C or > 55°C	Bad IZS heater Bad IZS temperature sensor Bad relay controlling the IZS heater Entire relay board is malfunctioning I^2C buss malfunction Failure of thermistor interface circuitry on motherboard
PMT DET WARNING	PMT detector output is > 4995 mV	Failed PMT Malfunctioning PMR preamp board A/D converter circuitry failure
PMT TEMP WARNING	PMT temperature is Sample chamber temperature is < 2°C or > 12°C	Bad PMT thermo-electric cooler Failed PMT TEC driver circuit Bad PMT preamp board Failed PMT temperature sensor Loose wiring between PMT temperature sensor and PMT Preamp board Malfunction of analog sensor input circuitry on motherboard
RCELL TEMP WARNING	Sample chamber temperature is < 45°C or > 55°C	Bad reaction cell heater Bad reaction cell temperature sensor Bad relay controlling the reaction cell heater Entire relay board is malfunctioning I^2C buss malfunction
Warning Message	Fault Condition	Possible Causes
REAR BOARD NOT DET	Mother Board not detected on power up.	Warning only appears on serial I/O com port(s) Front panel display will be frozen, blank or will not respond. Massive failure of mother board.
Relay BOARD WARN	The CPU cannot communicate with the Relay Board.	I^2C buss failure Failed relay board Loose connectors/wiring
SAMPLE FLOW WARN	Sample flow rate is < 500 cc/min or > 1000 cc/min.	Failed sample pump Blocked sample inlet/gas line Dirty particulate filter Leak downstream of critical flow orifice Failed flow sensor/circuitry
SAMPLE PRES WARN	Sample Pressure is <10 in-Hg or > 35 in-Hg[1]	If sample pressure is < 10 in-hg: o Blocked particulate filter o Blocked sample inlet/gas line o Failed pressure sensor/circuitry If sample pressure is > 35 in-hg: o Blocked vent line on pressurized sample/zero/span gas supply o Bad pressure sensor/circuitry
SYSTEM RESET	The computer has rebooted.	This message occurs at power on. If it is confirmed that power has not been interrupted: Failed +5 VDC power, Fatal error caused software to restart Loose connector/wiring
UV LAMP WARNING	The UV lamp intensity is < 600mV or > 4995 mV	UV lamp is bad Reference detector is bad Motherboard analog sensor input circuitry has failed. Fogged or damaged lenses/filters in UV light path A/D converter circuitry failure

[1] Normally 29.92 in-Hg at sea level decreasing at 1 in-Hg per 1000 ft of altitude (with no flow – pump disconnected).

9.1.2. FAULT DIAGNOSIS WITH TEST FUNCTIONS

Besides being useful as predictive diagnostic tools, the TEST functions, viewable from the front panel, can be used to isolate and identify many operational problems when combined with a thorough understanding of the analyzer's theory of operation (Section 10). We recommend use of the APICOM remote control program to download, graph and archive TEST data for analysis, and long-term monitoring of diagnostic data.

The acceptable ranges for these test functions are listed in Table A-3 in Appendix A-3. The actual values for these test functions on checkout at the factory were also listed in the Final Test and Validation Data Sheet, which was shipped with the instrument. Values outside the acceptable ranges indicate a failure of one or more of the analyzer's subsystems. Functions with values that are within the acceptable range but have significantly changed from the measurements recorded on the factory data sheet may also indicate a failure or a maintenance item. A problem report worksheet has been provided in Appendix C to assist in recording the value of these test functions. The following table (Table 9-2) contains some of the more common causes for these values to be out of range.

Table 9-2. Test Functions - Possible Causes for Out-Of-Range Values

TEST FUNCTION	INDICATED FAILURE(S)
H2S STB[1]	Unstable concentrations; leaks
SAMPLE FL	Leaks; clogged critical flow orifice
PMT	Calibration error; HVPS problem; PMT problem; No flow (leaks)
NORM PMT	Calibration error; HVPS problem; PMT problem
HVPS	HVPS broken; preamp board circuit problems
RCELL TEMP	Malfunctioning heater; relay board communication (I^2C bus); relay burnt out
BOX TEMP	Environment out of temperature operating range; broken thermistor; runaway heater
PMT TEMP	TEC cooling circuit broken; High chassis temperature; 12V power supply
IZS TEMP (OPTION)	Malfunctioning heater; relay board communication (I^2C bus); relay burnt out
CONV TEMP	Malfunctioning heater or temperature sensor; relay board communication (I^2C bus); relay burnt out
PRESS	Leak; malfunctioning valve; malfunctioning pump; clogged flow orifices; sample inlet overpressure;
H2S SLOPE[1]	Calibration error; span gas concentration incorrect; leaks; low lamp output
H2S OFFS[1]	Incorrect span gas concentration/contaminated zero air/leak; low-level calibration off
TIME OF DAY	Internal clock drifting; move across time zones; daylight savings time?

[1] Shown as they appear when analyzer is in H_2S mode. In SO_2 mode appear as **SO2 STB**, **SO2 OFFS** & **SO2 SLOPE.** In multigas mode, both versions appear.

9.1.3. USING THE DIAGNOSTIC SIGNAL I/O FUNCTION

The signal I/O parameters found under the diagnostics (DIAG) menu combined with a thorough understanding of the instrument's theory of operation (Section 10) are useful for troubleshooting in three ways:

- The technician can view the raw, unprocessed signal level of the analyzer's critical inputs and outputs.
- All of the components and functions that are normally under instrument control can be manually changed.
- Analog and digital output signals can be manually controlled.

This allows the user to systematically observe the effect of these functions on the operation of the analyzer.

Figure 9-2 shows an example of how to use the signal I/O menu to view the raw voltage of an input signal or to control the state of an output voltage or control signal. The specific parameter will vary depending on the situation. Please note that the analyzer will freeze it's concentration output while in the diagnostic signal I/O menu. This is because manually changing I/O outputs can invalidate the instrument reading.

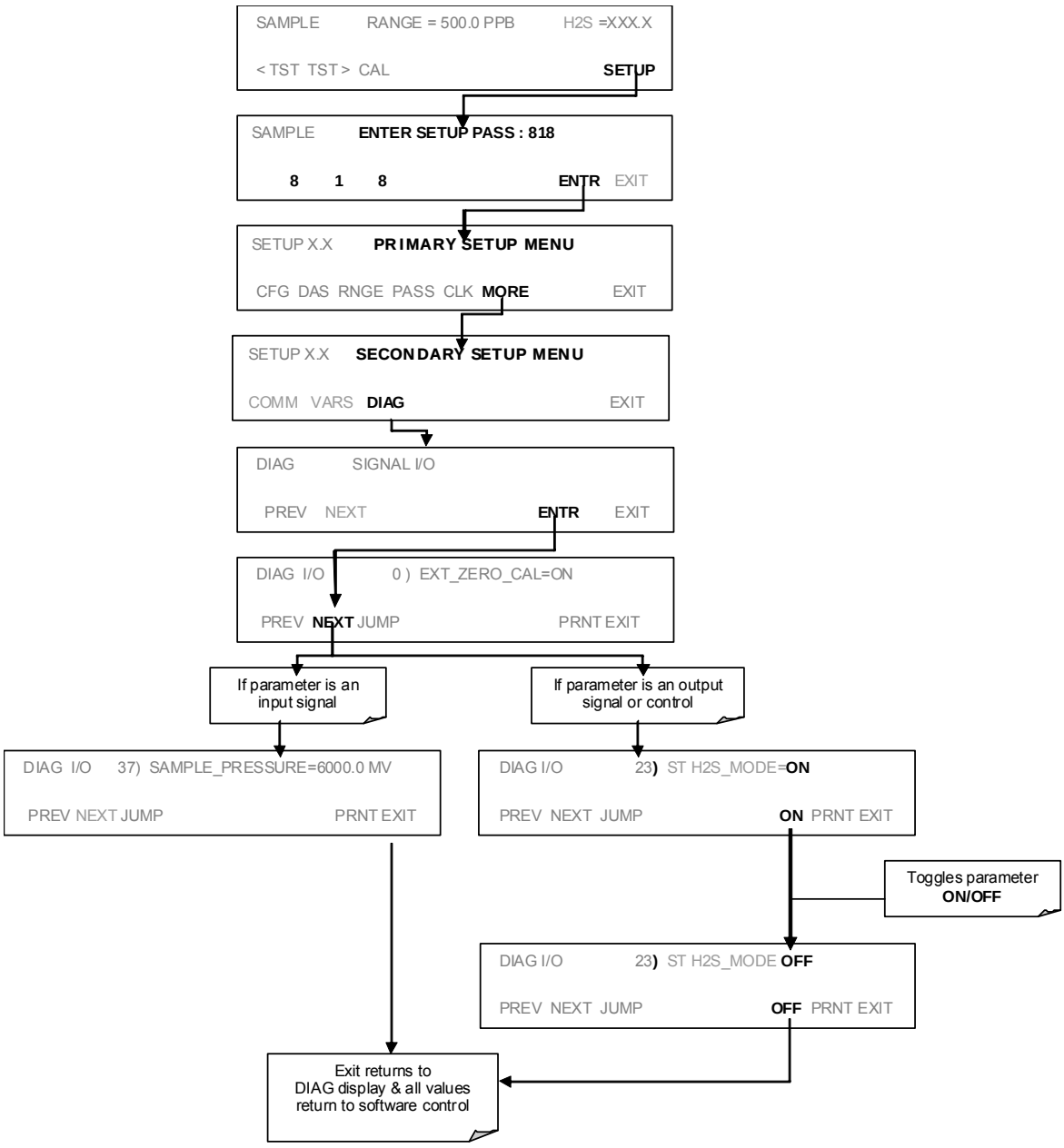

Figure 9-2. Example of Signal I/O Function

9.1.4. STATUS LEDS

Several color-coded, light-emitting diodes (LEDs) are located inside the instrument to determine if the analyzer's CPU, I^2C communications bus and relay board are functioning properly.

9.1.4.1. Motherboard Status Indicator (Watchdog)

DS5, a red LED on the upper portion of the motherboard, just to the right of the CPU board, flashes when the CPU is running the main program. After power-up, DS5 should flash on and off about once per second. If characters are written to the front panel display but DS5 does not flash then the program files have become corrupted. Contact Technical Support because it may be possible to recover operation of the analyzer. If, 30 - 60 seconds after a restart, DS5 is not flashing and no characters have been written to the front panel display, the firmware may be corrupted or the CPU may be defective. If DS5 is permanently off or permanently on, the CPU board is likely locked up and the analyzer should not respond (either with locked-up or dark front panel).

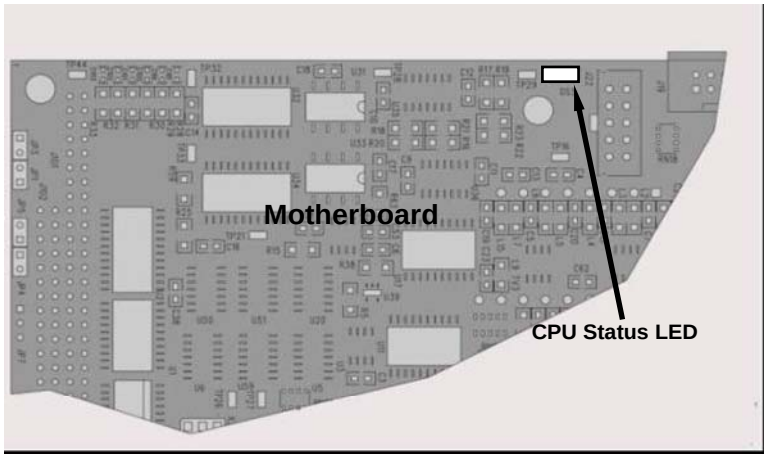

Figure 9-3. CPU Status Indicator

9.1.4.2. CPU Status Indicator

The CPU board has two red LEDs. LED1 is the upper-most LED and is a +5V power indicator, so it should always be on. However, both CPU LEDs only indicate if the CPU is powered up properly and generally working. The lower LED will sometimes be stable, and sometimes will blink. It can continue to blink even if the CPU or firmware are locked up, and is not an effective indicator for debugging system problems.

9.1.4.3. Relay Board Status LEDs

The most important status LED on the relay board is the red I^2C Bus watch-dog LED, labeled **D1** (or W/D), which indicates the health of the I^2C communications bus. This LED is located in the upper left-hand corner of the relay board when looking at the electronic components. If D1 is blinking, then the other LED's can be used in conjunction with the **DIAG** menu I/O functions to test hardware functionality by switching devices on and off and watching the corresponding LED go on or off. The LED only indicates that the logic signal for an output has been activated. If the output driver (i.e. the relay or valve driver IC) is defective, then the LED will light up, but the attached peripheral device will not turn on.

Table 9-3. Relay Board Status LEDs

LED	COLOR	FUNCTION	FAULT STATUS	INDICATED FAILURE(S)
D1	red	Watchdog Circuit; I2C bus operation.	Continuously ON or OFF	Failed or halted CPU; faulty motherboard, keyboard, relay board; wiring between motherboard, keyboard or relay board; +5 V power supply.
D2	yellow	Relay 0 - sample chamber heater	Continuously ON or OFF	Heater broken, thermistor broken
D3	yellow	Relay 1 – H_2S converter heater	Continuously ON or OFF	Heater broken, thermocouple broken
D4[1]	yellow	Spare	N/A	N/A
D5	yellow	Relay 3 - IZS heater	Continuously ON or OFF	Heater broken, thermistor broken
D6	yellow	Relay 4 - Spare	N/A	N/A
D7[2]	green	Valve 0 - zero/span valve status	Continuously ON or OFF	Valve broken or stuck, valve driver chip broken
D8[2]	green	Valve 1 - sample/cal valve status	Continuously ON or OFF	Valve broken or stuck, valve driver chip broken
D9	green	Valve 2 - auto-zero valve status	Continuously ON or OFF	Valve broken or stuck, valve driver chip broken
D10	green	Valve 3 - SO/SOx valve status	Continuously ON or OFF	Valve broken or stuck, valve driver chip broken
D11	green	Valve 4 - Spare	N/A	N/A
D12	green	Valve 5 - Spare	N/A	N/A
D13	green	Valve 6 - Spare	N/A	N/A
D14	green	Valve 7 - Spare	N/A	N/A
D15	green	Mosfet1-Unused	N/A	N/A
D16	Green	Mosfet2-Unused	N/A	N/A

[1] Special configurations only
[2] Only active for instruments with Z/S valve or IZS options installed

9.2. GAS FLOW PROBLEMS

The standard T101 has one main flow path. With the IZS option installed, there is a second flow path flow path through the IZS oven that runs whenever the IZS is on standby to purge H_2S from the oven chamber. The IZS flow is not measured and is not available from the front panel. The full flow diagrams of the standard configuration (Figure 3-10) and with options installed (Figure 3-2 and 5-3) help in trouble-shooting flow problems. In general, flow problems can be divided into three categories:

- Flow is too high
- Flow is greater than zero, but is too low, and/or unstable
- Flow is zero (no flow)

When troubleshooting flow problems, it is essential to confirm the actual flow rate without relying on the analyzer's flow display. The use of an independent, external flow meter to perform a flow check as described in Section 9.5.2 is essential.

9.2.1. ZERO OR LOW SAMPLE FLOW

If the pump is operating but the unit reports a 0 gas flow, do the following three steps:

- Check for actual sample flow
- Check pressure
- Carry out a leak check

To check the actual sample flow, disconnect the sample tube from the sample inlet on the rear panel of the instrument. Make sure that the unit is in basic SAMPLE mode. Place a finger over the inlet and see if it gets sucked in by the vacuum or, more properly, use a flow meter to measure the actual flow. If there is proper flow of around 550-650 cm^3/min, contact Technical Support. If there is no flow or low flow, continue with the next step.

Check that the sample pressure is at or around 26 in-Hg-A (about 1" below ambient atmospheric pressure).

9.2.2. HIGH FLOW

Flows that are significantly higher than the allowed operating range (typically ±10% of the nominal flow) should not occur in the T101 unless a pressurized sample, zero or span gas is supplied to the inlet ports. Be sure to vent excess pressure and flow just before the analyzer inlet ports.

When supplying sample, zero or span gas at ambient pressure, a high flow would indicate that one or more of the critical flow orifices are physically broken (very unlikely case), allowing more than nominal flow, or were replaced with an orifice of wrong specifications. If the flows are more than 15% higher than normal, we recommend that the technician re-calibrate the flow electronically using the procedure in Section 4.6.8, followed by a thorough and regular monitoring of these flows to see if the new setting is retained properly.

9.3. CALIBRATION PROBLEMS

This section presents som possible calibratio, problems and suggested solutions.

9.3.1. NEGATIVE CONCENTRATIONS

Negative concentration values can be caused for several things:

- A slight, negative signal is normal when the analyzer is operating under zero gas and the signal is drifting around the zero calibration point. This is caused by the analyzer's zero noise and may cause reported concentrations to be negative for a few seconds at a time down to -20 ppb, but should alternate with similarly high, positive values.
- Mis-calibration is the most likely explanation for negative concentration values. If the zero air contained some H_2S gas (contaminated zero air or a worn-out zero air scrubber) and the analyzer was calibrated to that concentration as "zero", the analyzer may report negative values when measuring air that contains little or no H_2S. The same problem occurs, if the analyzer was zero-calibrated using ambient air or span gas.

- If the response offset test function for H_2S (**H2S OFFS**) are greater than 150 mV, a failed PMT or high voltage supply, or sample chamber contamination, could be the cause. Clean the sample chamber according to Section 8.3.6.

9.3.2. NO RESPONSE

If the instrument shows no response (display value is near zero) even though sample gas is supplied properly and the instrument seems to perform correctly,

- Confirm response by supplying H_2S span gas of about 80% of the range value to the analyzer.
- Check the sample flow rate for proper value.
- Check for disconnected cables to the sensor module.
- Carry out an electrical test with the **ELECTRICAL TEST** (ETEST) procedure in the diagnostics menu, see Section 4.6.5. If this test produces a concentration reading, the analyzer's electronic signal path is working.
- Carry out an optical test using the **OPTIC TEST** (OTEST) procedure in the diagnostics menu, see Section 4.6.4. If this test results in a concentration signal, then the PMT sensor and the electronic signal path are operating properly. If the T101 passes both ETEST and OTEST, the instrument is capable of detecting light and processing the signal to produce a reading. Therefore, the problem must be in the pneumatics, optics or the UV lamp/lamp driver.

9.3.3. UNSTABLE ZERO AND SPAN

Leaks in the T101 or in the external gas supply and vacuum systems are the most common source of unstable and non-repeatable concentration readings.

- Check for leaks in the pneumatic systems as described in Section 9.5.1. Consider pneumatic components in the gas delivery system outside the T101 such as a change in zero air source (ambient air leaking into zero air line or a worn-out zero air scrubber) or a change in the span gas concentration due to zero air or ambient air leaking into the span gas line.
- Once the instrument passes a leak check, do a flow check (Section 9.5.2) to make sure that the instrument is supplied with adequate sample gas.
- Confirm the UV lamp, sample pressure and sample temperature readings are correct and steady.
- Verify that the sample filter element is clean and does not need to be replaced.

9.3.4. INABILITY TO SPAN - NO SPAN BUTTON

In general, the T101 will not display certain keyboard choices whenever the actual value of a parameter is outside of the expected range for that parameter. If the calibration menu does not show a SPAN button when carrying out a span calibration, the actual concentration must be outside of the range of the expected span gas concentration, which can have several reasons.

- Verify that the expected concentration is set properly to the actual span gas concentration in the **CONC** sub-menu.
- Confirm that the H_2S span gas source is accurate. This can be done by comparing the source with another calibrated analyzer, or by having the H_2S source verified by an independent traceable photometer.
- Check for leaks in the pneumatic systems as described in Section 9.5.1. Leaks can dilute the span gas and, hence, the concentration that the analyzer measures may fall short of the expected concentration defined in the **CONC** sub-menu.
- If the physical, low-level calibration has drifted (changed PMT response) or was accidentally altered by the user, a low-level calibration may be necessary to get the analyzer back into its proper range of expected values. One possible indicator of this scenario is a slope or offset value that is outside of its allowed range (0.7-1.3 for slope, -20 to 150 for offsets). See Section 9.6.4 on how to carry out a low-level hardware calibration.

9.3.5. INABILITY TO ZERO - NO ZERO BUTTON

In general, the T101 will not display certain keyboard choices whenever the actual value of a parameter is outside of the expected range for that parameter. If the calibration menu does not show a ZERO button when carrying out a zero calibration, the actual gas concentration must be significantly different from the actual zero point (as per last calibration), which can have several reasons.

- Confirm that there is a good source of zero air. If the IZS option is installed, compare the zero reading from the IZS zero air source to an external zero air source using H_2S and SO_2 free air. Check the zero air scrubber for performance. It may need to be replaced (Section 8.3.3).
- Check to make sure that there is no ambient air leaking into the zero air line. Check for leaks in the pneumatic systems as described in Section 9.5.

9.3.6. NON-LINEAR RESPONSE

The T101 was factory calibrated to a high level of H_2S and should be linear to within 1% of full scale. Common causes for non-linearity are

- Leaks in the pneumatic system. Leaks can add a constant of ambient air, zero air or span gas to the current sample gas stream, which may be changing in concentrations as the linearity test is performed. Check for leaks as described in Section 9.5.
- The calibration device is in error. Check flow rates and concentrations, particularly when using low concentrations. If a mass flow calibrator is used and the flow is less than 10% of the full scale flow on either flow controller, you may need to purchase lower concentration standards.
- The standard gases may be mislabeled as to type or concentration. Labeled concentrations may be outside the certified tolerance.
- The sample delivery system may be contaminated. Check for dirt in the sample lines or sample chamber.
- Calibration gas source may be contaminated.

- Dilution air contains sample or span gas.
- Sample inlet may be contaminated with H_2S exhaust from this or other analyzers. Verify proper venting of the pump exhaust.
- Span gas overflow is not properly vented and creates a back-pressure on the sample inlet port. Also, if the span gas is not vented at all and does not supply enough sample gas, the analyzer may be evacuating the sample line. Make sure to create and properly vent excess span gas.
- If the instrument is equipped with an intern IZS valve option and the H_2S span value is continuously trending downward, the IZS permeation tube may require replacement

9.3.7. DISCREPANCY BETWEEN ANALOG OUTPUT AND DISPLAY

If the concentration reported through the analog outputs does not agree with the value reported on the front panel, you may need to re-calibrate the analog outputs. This becomes more likely when using a low concentration or low analog output range. Analog outputs running at 0.1 V full scale should always be calibrated manually. See Section 4.6.3.3. for a detailed description of this procedure.

9.4. OTHER PERFORMANCE PROBLEMS

Dynamic problems (i.e. problems which only manifest themselves when the analyzer is monitoring sample gas) can be the most difficult and time consuming to isolate and resolve. The following section provides an itemized list of the most common dynamic problems with recommended troubleshooting checks and corrective actions.

9.4.1. EXCESSIVE NOISE

Excessive noise levels under normal operation usually indicate leaks in the sample supply or the analyzer itself. Make sure that the sample or span gas supply is leak-free and carry out a detailed leak check as described earlier in this chapter.

Another possibility of excessive signal noise may be the preamplifier board, the high voltage power supply and/or the PMT detector itself. Contact the factory on trouble-shooting these components.

9.4.2. SLOW RESPONSE

If the analyzer starts responding too slowly to any changes in sample, zero or span gas, check for the following:

- Dirty or plugged sample filter or sample lines.
- Sample inlet line is too long.
- Dirty or plugged critical flow orifices. Check flows (Section 9.5.2), pressures (Section 9.5.1) and, if necessary, change the critical flow orifice (Section 8.3.7).
- Wrong materials in contact with sample - use Teflon materials only.
- Sample vent line is located too far from the instrument sample inlet and causes long mixing and purge times. Locate sample inlet (overflow) vent as close as possible to the analyzer's sample inlet port.

- Dirty sample chamber. Clean the sample chamber.
- Insufficient time allowed for purging of lines upstream of the analyzer.
- Insufficient time allowed for H_2S calibration gas source to become stable.

9.4.3. THE ANALYZER DOESN'T APPEAR ON THE LAN OR INTERNET

Most problems related to Internet communications via the Ethernet will be due to problems external to the analyzer (e.g. bad network wiring or connections, failed routers, malfunctioning servers, etc.). However, there are several symptoms that indicate the problem may be with the Ethernet card itself.

If neither of the Ethernet cable's two status LED's (located on the back of the cable connector) is lit while the instrument is connected to a network:

- Verify that the instrument is being connected to an active network jack.
- Check the internal cable connection between the Ethernet card and the CPU board.

9.5. SUBSYSTEM CHECKOUT

The preceding sections of this manual discussed a variety of methods for identifying possible sources of failures or performance problems within the analyzer. In most cases this included a list of possible causes and, in some cases, quick solutions or at least a pointer to the appropriate sections describing them. This section describes how to determine if a certain component or subsystem is actually the cause of the problem being investigated.

9.5.1. DETAILED PRESSURE LEAK CHECK

Obtain a leak checker similar to Teledyne API's part number 01960, which contains a small pump, shut-off valve, and pressure gauge to create both over-pressure and vacuum. Alternatively, a tank of pressurized gas, with the two stage regulator adjusted to ≤ 15 psi, a shutoff valve and pressure gauge may be used.

CAUTION

Once tube fittings have been wetted with soap solution under a pressurized system, do not apply or re-apply vacuum as this will cause soap solution to be sucked into the instrument, contaminating inside surfaces.

Do not exceed 15 PSI when pressurizing the system.

1. Turn OFF power to the instrument and remove the instrument cover.
2. Install a leak checker or a tank of gas (compressed, oil-free air or nitrogen) as described above on the sample inlet at the rear panel.
3. Pressurize the instrument with the leak checker or tank gas, allowing enough time to fully pressurize the instrument through the critical flow orifice. Check each tube connection (fittings, hose clamps) with soap

bubble solution, looking for fine bubbles. Once the fittings have been wetted with soap solution, do not re-apply vacuum as it will draw soap solution into the instrument and contaminate it. Do not exceed 15 psi pressure.

4. If the instrument has the zero and span valve option, the normally closed ports on each valve should also be separately checked. Connect the leak checker to the normally closed ports and check with soap bubble solution.
5. If the analyzer is equipped with an IZS Option, connect the leak checker to the Dry Air inlet and check with soap bubble solution.
6. Once the leak has been located and repaired, the leak-down rate of the indicated pressure should be less than 1 in-Hg-A (0.4 psi) in 5 minutes after the pressure is turned off.
7. Clean soap solution from all surfaces, re-connect the sample and exhaust lines, and replace the instrument cover. Restart the analyzer.

9.5.2. PERFORMING A SAMPLE FLOW CHECK

CAUTION

Use a separate, calibrated flow meter capable of measuring flows between 0 and 1000 cm^3/min to measure the gas flow rate though the analyzer. Do not use the built in flow measurement viewable from the front panel of the instrument.

Sample flow checks are useful for monitoring the actual flow of the instrument, to monitor drift of the internal flow measurement. A decreasing, actual sample flow may point to slowly clogging pneumatic paths, most likely critical flow orifices or sintered filters. To perform a sample flow check:

1. Disconnect the sample inlet tubing from the rear panel SAMPLE port shown in Figure 3-2.
2. Attach the outlet port of a flow meter to the sample inlet port on the rear panel. Ensure that the inlet to the flow meter is at atmospheric pressure.
3. The sample flow measured with the external flow meter should be 600 $cm^3/min \pm 75$ cm^3/min. If a combined sample/ozone air Perma Pure dryer is installed (optional equipment), the flow will be 740 $cm^3/min \pm 10\%$ (600 cm^3/min for the sample and 140 cm^3/min for the ozone generator supply air).
4. Low flows indicate blockage somewhere in the pneumatic pathway.

9.5.3. AC POWER CONFIGURATION

The T101 can be easily configured for two main power regimes, 100-120 V and 220-240 V at either 50 or 60 Hz. The analyzer is correctly configured for the AC power voltage in use if it turns on and shows a front panel display after about 30 seconds. Internally, several LEDs should turn on as soon as the power is supplied. If an incorrect power configuration is suspected, check for the correct voltage and frequency at the line input on the rear panel.

If the unit is set for 220-240 V and is plugged into 100-120 V, the analyzer will not start.

If the unit is set for 100-120 V and is plugged into 220-240 V, the circuit breaker built into the ON/OFF Switch on the front panel will trip to the OFF position immediately after power is switched on. Note that the analyzer will be severely damaged if 220-240 V is supplied to it when configured for 100-120 V. Never bypass the power switch or circuit breaker.

9.5.4. DC POWER SUPPLY

If you have determined that the analyzer's AC main power is working, but the unit is still not operating properly, there may be a problem with one of the instrument's switching power supplies, which convert AC power to 5 and ±15 V (PS1) as well as +12 V DC power (PS2). The supplies can either have DC output at all or a noisy output (fluctuating).

To assist tracing DC Power Supply problems, the wiring used to connect the various printed circuit assemblies and DC powered components and the associated test points on the relay board follow a standard color-coding scheme as defined in Table 11-4.

Table 9-4. DC Power Test Point and Wiring Color Code

NAME	TEST POINT#	COLOR	DEFINITION
DGND	1	Black	Digital ground
+5V	2	Red	
AGND	3	Green	Analog ground
+15V	4	Blue	
-15V	5	Yellow	
+12V	6	Purple	
+12R	7	Orange	12 V return (ground) line

A voltmeter should be used to verify that the DC voltages are correct as listed in Table 11-5. An oscilloscope, in AC mode and with band limiting turned on, can be used to evaluate if the supplies are excessively noisy (>100 mV peak-to-peak).

Table 9-5. DC Power Supply Acceptable Levels

POWER SUPPLY	VOLTAGE	CHECK RELAY BOARD TEST POINTS				MIN V	MAX V
		From Test Point		To Test Point			
		Name	#	Name	#		
PS1	+5	DGND	1	+5	2	+4.80	+5.25
PS1	+15	AGND	3	+15	4	+13.5	+16.0
PS1	-15	AGND	3	-15V	5	-14.0	-16.0
PS1	AGND	AGND	3	DGND	1	-0.05	+0.05
PS1	Chassis	DGND	1	Chassis	N/A	-0.05	+0.05
PS2	+12	+12V Ret	6	+12V	7	+11.8	+12.5
PS2	DGND	+12V Ret	6	DGND	1	-0.05	+0.05

9.5.5. I²C BUS

Operation of the I^2C bus can be verified by observing the behavior of the LED labeled **D1** on the relay board in conjunction with the performance of the front panel display. Assuming that the DC power supplies are operating properly and the wiring from the motherboard to the keyboard as well as from the keyboard to the relay board is intact, the I^2C bus is operating properly if:

- D1 on the relay board is flashing or;
- D1 is not flashing but pressing a button on the touchscreen results in a change to the display.

If the display is locked up or if the analyzer is not booting up at all, the I^2C bus may be the cause. Contact Technical Support if you suspect a problem with the I^2C bus.

9.5.6. TOUCHSCREEN INTERFACE

Verify the functioning of the touch screen by observing the display when pressing a touch-screen control button. Assuming that there are no wiring problems and that the DC power supplies are operating properly, but pressing a control button on the touch screen does not change the display, any of the following may be the problem:

- The touch-screen controller may be malfunctioning
- The internal USB bus may be malfunctioning

9.5.7. LCD DISPLAY MODULE

Verify the functioning of the front panel display by observing it when power is applied to the instrument. Assuming that there are no wiring problems and that the DC power supplies are operating properly, the display screen should light and show the splash screen and other indications of its state as the CPU goes through its initialization process.

9.5.8. RELAY BOARD

The relay board circuit can most easily be checked by observing the condition of its status LEDs as described in Section 10.4.9, and the associated output when toggled on and off through the **SIGNAL I/O** function in the **DIAG** menu, see Section 4.6.1.

If the front panel display responds to key presses and D1 on the relay board is not flashing, then either the I2c connection between the motherboard and the relay board is bad, or the relay board itself is bad.

If D1 on the relay board is flashing, but toggling an output in the **Signal I/O** function menu does not toggle the output's status LED, the there is a circuit problem, or possibly a blown driver chip, on the relay board.

If D1 on the Relay board is flashing and the status indicator for the output in question (heater, valve, etc.) toggles properly using the **Signal I/O** function, but the output device does not turn on/off, then the associated device (valve or heater) or its control device (valve driver, heater relay) is malfunctioning.

Several of the control devices are in sockets and can easily be replaced. The table below lists the control device associated with a particular function:

Table 9-6. Relay Board Control Devices

FUNCTION	CONTROL DEVICE	SOCKETED
Valve0 – Valve3	U5	Yes
Valve4 – Valve7	U6	Yes
All heaters	K1-K5	Yes

9.5.9. MOTHERBOARD

9.5.9.1. A/D functions

A basic check of the analog to digital (A/D) converter operation on the motherboard is to use the **Signal I/O** function under the **DIAG** menu. Check the following two A/D reference voltages and input signals that can be easily measured with a voltmeter.

- Using the **Signal I/O** function (Section 4.6.1 and Appendix D), view the value of **REF_4096_MV** and **REF_GND**. If these signals are within 10 mV and 3 mV, respectively, of their nominal values (4096 and 0) and are stable to within ±0.5 mV, the basic A/D converter is functioning properly. If these values fluctuate largely or are off by more than specified above, one or more of the analog circuits may be overloaded or the motherboard may be faulty.
- Choose one parameter in the Signal I/O function such as **SAMPLE_PRESSURE** (see previous section on how to measure it). Compare its actual voltage with the voltage displayed through the **SIGNAL I/O** function. If the wiring is intact but there is a difference of more than ±10 mV between the measured and displayed voltage, the motherboard may be faulty.

9.5.9.2. Analog Output Voltages

To verify that the analog outputs are working properly, connect a voltmeter to the output in question and perform an analog output step test as described in Section 4.6.2.

For each of the steps, taking into account any offset that may have been programmed into the channel (Section 4.6.3.4), the output should be within 1% of the nominal value listed in the table below except for the 0% step, which should be within 2-3 mV. If one or more of the steps is outside of this range, a failure of one or both D/A converters and their associated circuitry on the motherboard is likely.

Table 9-7. Analog Output Test Function - Nominal Values

		FULL SCALE OUTPUT VOLTAGE			
		100MV	1V	5V	10V
STEP	%	NOMINAL OUTPUT VOLTAGE			
1	0	0 mV	0	0	0
2	20	20 mV	0.2	1	2
3	40	40 mV	0.4	2	4
4	60	60 mV	0.6	3	6
5	80	80 mV	0.8	4	8
6	100	100 mV	1.0	5	10

9.5.9.3. Status Outputs

The procedure below can be used to test the Status outputs.

1. Connect a cable jumper between the "-" pin and the "▽" pin on the status output connector.
2. Connect a 1000 Ω resistor between the +5 V and the pin for the status output that is being tested.

Table 9-8. Status Outputs Check Pin Out

PIN (left to right)	STATUS
1	System Ok
2	Conc Valid
3	High Range
4	Zero Cal
5	Span Cal
6	Diag Mode
7	Spare
8	Spare

3. Connect a voltmeter between the "-" pin and the pin of the output being tested (Table 11-8).
4. Under the **DIAG > SIGNAL I/O** menu (Section 4.6.1), scroll through the inputs and outputs until you get to the output in question. Alternately turn on and off the output noting the voltage on the voltmeter, it should vary between 0 volts for ON and 5 volts for OFF.

9.5.9.4. Control Inputs

The control input bits can be tested by the following procedure:

1. Connect a jumper from the +5 V pin on the STATUS connector to the +5 V on the CONTROL IN connector.
2. Connect a second jumper from the '-' pin on the STATUS connector to the A pin on the CONTROL IN connector. The instrument should switch from **SAMPLE** mode to **ZERO CAL R** mode.
3. Connect a second jumper from the '-' pin on the STATUS connector to the B pin on the CONTROL IN connector. The instrument should switch from **SAMPLE** mode to **SPAN CAL R** mode.

In each case, the T101 should return to SAMPLE mode when the jumper is removed.

9.5.10. CPU

There are two major types of CPU board failures, a complete failure and a failure associated with the Disk-On-Module (DOM). If either of these failures occur, contact the factory.

For complete failures, assuming that the power supplies are operating properly and the wiring is intact, the CPU is faulty if on power-on, the watchdog LED on the motherboard is not flashing.

In some rare circumstances, this failure may be caused by a bad IC on the motherboard, specifically U57, the large, 44 pin device on the lower right hand side of the board. If this is true, removing U57 from its socket will allow the instrument to start up but the measurements will be invalid.

If the analyzer stops during initialization (the front panel display shows a fault or warning message), it is likely that the DOM, the firmware or the configuration and data files have been corrupted.

9.5.11. RS-232 COMMUNICATION

9.5.11.1. General RS-232 Troubleshooting

Teledyne API analyzers use the RS-232 protocol as the standard, serial communications protocol. RS-232 is a versatile standard, which has been used for many years but, at times, is difficult to configure. Teledyne API instruments conform to the standard pin assignments in the implementation of RS-232. Problems with RS-232 connections usually center around 4 general areas:

- Incorrect cabling and connectors. This is the most common problem. See Figure 4-8 for connector and pin-out information and Section 4.7.3.
- The communications (baud) rate and protocol parameters are incorrectly configured. See Section 4.7.11 on how to set the baud rate.
- The COM port communications mode is set incorrectly (Section 4.7.10).
- If a modem is used, additional configuration and wiring rules must be observed. See Section 5.1.2.7.
- Incorrect setting of the DTE - DCE Switch is set correctly See Section 4.7.5.

9.5.11.2. Modem or Terminal Operation

These are the general steps for troubleshooting problems with a modem connected to a Teledyne API analyzer.

- Check cables for proper connection to the modem, terminal or computer.
- Check the correct position of the DTE/DCE as described in Section 4.7.5.
- Check the correct setup command (Section 5.1.2.7).
- Verify that the Ready to Send (RTS) signal is at logic high. The T101 sets pin 7 (RTS) to greater than 3 volts to enable modem transmission.
- Make sure the baud rate, word length, and stop bit settings between modem and analyzer match, see Section 5.1.2.7 and Section 4.7.
- Use the RS-232 test function to send "w" characters to the modem, terminal or computer; See Section 4.7.10.
- Get your terminal, modem or computer to transmit data to the analyzer (holding down the space bar is one way). The green LED on the rear panel should flicker as the instrument is receiving data.
- Make sure that the communications software is functioning properly.

Further help with serial communications is available in a separate manual "RS-232 Manual", Teledyne API part number 013500000, available online at http://www.Teledyne-api.com/manuals/.

9.5.12. PMT SENSOR

The photo multiplier tube detects the light emitted by the UV excited fluorescence of H_2S. It has a gain of about 500000 to 1000000. It is not possible to test the detector outside of the instrument in the field. The best way to determine if the PMT is working properly is by using the optical test (**OTEST**), which is described in Section 4.6.4. The basic method to diagnose a PMT fault is to eliminate the other components using **ETEST**, **OTEST** and specific tests for other sub-assemblies.

9.5.13. PMT PREAMPLIFIER BOARD

To check the correct operation of the preamplifier board, we suggest the technician carry out the electrical and optical tests described in Sections 4.6.4. and 4.6.5. If the **ETEST** fails, the preamplifier board may be faulty.

9.5.14. PMT TEMPERATURE CONTROL PCA

The TEC control printed circuit assembly is located on the sensor housing assembly, under the slanted shroud, next to the cooling fins and directly above the cooling fan.

If the red LED located on the top edge of this assembly is not glowing the control circuit is not receiving power. Check the analyzers power supply, the Relay board's power distribution circuitry and the and the wiring connecting them to the PMT temperature control PCA.

TEC Control Test Points

Four test points are also located at the top of this assembly they are numbered left to right start with the T1 point immediately to the right of the power status LED. These test points provide information regarding the functioning of the control circuit.

- To determine the current running through the control circuit, measure the voltage between T1 and T2. Multiply that voltage by 10.
- To determine the drive voltage being supplied by the control circuit to the TEC, measure the voltage between T2 and T3.
  - If this voltage is zero, the TEC circuitry is most likely open.

  Or,

  - If the voltage between T2 and T3 = 0 VDC and the voltage measured between T1 and T2 = 0 VDC there is most likely an open circuit or failed op amp on control PCA itself
  - If the voltage between T2 and T3 = 0 VDC and the voltage measured between T1 to T2 is some voltage other than 0 VDC, the TEC is most likely shorted
- T4 is tied directly to ground. To determine the absolute voltage on any one of the other test points make a measurement between that test point and T4.

9.5.15. HIGH VOLTAGE POWER SUPPLY

The HVPS is located in the interior of the sensor module and is plugged into the PMT tube (Figure 10-13). It requires 2 voltage inputs. The first is +15 which powers the supply. The second is the programming voltage which is generated on the Preamp Board. This power supply is unlike a traditional PMT HVPS. It is like having 10 independent power supplies, one to each pin of the PMT. The test procedure below allows you to test each supply.

Adjustment of the HVPS is covered in the factory calibration procedure in Section 9.6.4.

9.5.16. PNEUMATIC SENSOR ASSEMBLY

The pressure/flow sensor circuit board, located behind the sensor assembly, can be checked with a voltmeter using the following procedure, which assumes that the wiring is intact and that the motherboard and the power supplies are operating properly.

Measure the voltage across TP1 and TP2, it should be 10.0 ± 0.25 V. If not, the board is faulty. Measure the voltage across capacitor C2; it should be 5.0 ± 0.25 V. If not, the board may be faulty.

9.5.16.1. Sample Pressure

Measure the voltage across test points TP1 and TP4. With the sample pump disconnected or turned off, this voltage should be 4500 ± 250 mV. With the pump running, it should be about 0.2 V less as the sample pressure drops by about 1 in-Hg-A from ambient pressure. If this voltage is significantly different, the pressure transducer S2 or the board may be faulty. A leak in the sample system to vacuum may also cause this voltage to be between about 0.6 and 4.5. Make sure that the front panel reading of the sample pressure is at about 1 in-Hg-A less than ambient pressure.

9.5.17. IZS OPTION

The zero/span valves and IZS options need to be enabled in the software (contact the factory on how to do this). See Figure 3-2 and 5-3 for a flow diagram with zero/span valve or IZS option.

- Check for the physical presence of the valves or the IZS option.
- Check that a working perm-tube is installed in the IZS oven assembly.
- Check front panel for correct software configuration. When the instrument is in SAMPLE mode, the front panel display should show **CALS** and **CALZ** buttons in the second line of the display. The presence of the buttons indicates that the option has been enabled in software. In addition, the IZS option is enabled if the TEST functions show a parameter named IZS TEMP.

The semi-permeable PTFE membrane of the permeation tube is affected by humidity. If the instrument is installed in an air-conditioned shelter, the air is usually dry enough to produce good results. If the instrument is installed in an environment with variable or high humidity, variations in the permeation tube output will be significant. In this case, a dryer for the supply air is recommended (dew point should be-20° C or less).

The IZS option is heated with a proportional heater circuit and the temperature is maintained at 50° C ±1°. Check the **IZS TEMP** function via front panel display (Section 4.2.1) and the **IZS_TEMP** signal voltage using the **SIGNAL I/O** function under the **DIAG** Menu (Section 4.6.1). At 50° C, the temperature signal from the IZS thermistor should be around 2500 mV.

9.5.18. BOX TEMPERATURE

The box temperature sensor (thermistor) is mounted on the motherboard at the bottom, right corner of the CPU board when looking at it from the front. It cannot be disconnected to check its resistance. Box temperature will vary with, but will always read about 5° C higher than, ambient (room) temperature because of the internal heating zones from the H_2S converter, sample chamber and other devices. To check the box temperature functionality, we recommend checking the **BOX_TEMP** signal voltage using the **SIGNAL I/O** function under the **DIAG** Menu (Section 4.6.1). At about 30° C (5° above typical room temperature), the signal should be around 1500 mV. We recommend using a certified or calibrated external thermometer / temperature sensor to verify the accuracy of the box temperature.

9.5.19. PMT TEMPERATURE

PMT temperature should be low and constant. It is more important that this temperature is maintained constant than it is to maintain it low. The PMT cooler uses a Peltier, thermo-electric element powered by 12 VDC from the switching power supply PS2. The temperature is controlled by a proportional temperature controller located on the preamplifier board. Voltages applied to the cooler element vary from +/- 0.1 to +/- 12 VDC. The temperature set point (hard-wired into the preamplifier board) will vary by about ±1° C due to component tolerances. The actual temperature will be maintained to within 0.1° C around that set point. On power-up of the analyzer, the front panel enables the user to watch that temperature drop from about ambient temperature down to its set point of 6-8° C. If the temperature fails to drop after 20 minutes, there is a problem in the cooler circuit. If the control circuit on the preamplifier board is faulty, a temperature of -1° C is reported.

9.6. REPAIR PROCEDURES

This section contains some procedures that may need to be performed when a major component of the analyzer requires repair or replacement. Note that replacement procedures that are discussed in detail in Section 8 (Maintenance) are not listed here. Servicing of circuit components requires electrostatic discharge protection, i.e. ESD grounding straps, mats and containers. Failure to use ESD protection when working with electronic assemblies will void the instrument warranty.

9.6.1. DISK-ON-MODULE REPLACEMENT

Replacing the Disk-on-Module (DOM) will cause loss of all DAS data; it also may cause loss of some instrument configuration parameters unless the replacement DOM carries the exact same firmware version. Whenever changing the version of installed software, the memory must be reset. Failure to ensure that memory is reset can cause the analyzer to malfunction, and invalidate measurements. After the memory is reset, the A/D converter must be re-calibrated, and all information collected in Step 1 below must

be re-entered before the instrument will function correctly. Also, zero and span calibration should be performed.

1. Document all analyzer parameters that may have been changed, such as range, auto-cal, analog output, serial port and other settings before replacing the DOM
2. Turn off power to the instrument, fold down the rear panel by loosening the mounting screws.
3. When looking at the electronic circuits from the back of the analyzer, locate the Disk-on-Module in the right-most socket of the CPU board.
4. The DOM should carry a label with firmware revision, date and initials of the programmer.
5. Remove the nylon fastener that mounts the DOM over the CPU board, and lift the DOM off the CPU. Do not bend the connector pins.
6. Install the new Disk-on-Module, making sure the notch at the end of the chip matches the notch in the socket.
7. It may be necessary to straighten the pins somewhat to fit them into the socket. Press the DOM all the way in and reinsert the offset clip.
8. Close the rear panel and turn on power to the machine.
9. If the replacement DOM carries a firmware revision, re-enter all of the setup information.

9.6.2. ADJUSTING THE UV LAMP (PEAKING THE LAMP)

There are two ways in which ambient conditions can affect the UV Lamp output and therefore the accuracy of the SO_2 concentration measurement: lamp aging and lamp positioning.

Lamp Aging - Over a period of months, the UV energy will show a downward trend and can be up to 50% in the first 90 days, and then a slower rate, until the end of useful life of the lamp. Periodically running the UV lamp calibration routine (refer to Section 4.6.6) will compensate for this until the lamp output becomes too low to function at all.

NOTE

As the lamp degrades over time, the software for the CPU compensates for the loss of UV output.

Lamp Positioning – The UV output level of the lamp is not even across the entire length of the lamp. Some portions of the lamp shine slightly more brightly than others. At the factory the position of the UV lamp is adjusted to optimize the amount of UV light shining through the UV filter/lens and into the reaction cell. Changes to the physical alignment of the lamp can affect the analyzers ability to accurately measure SO_2.

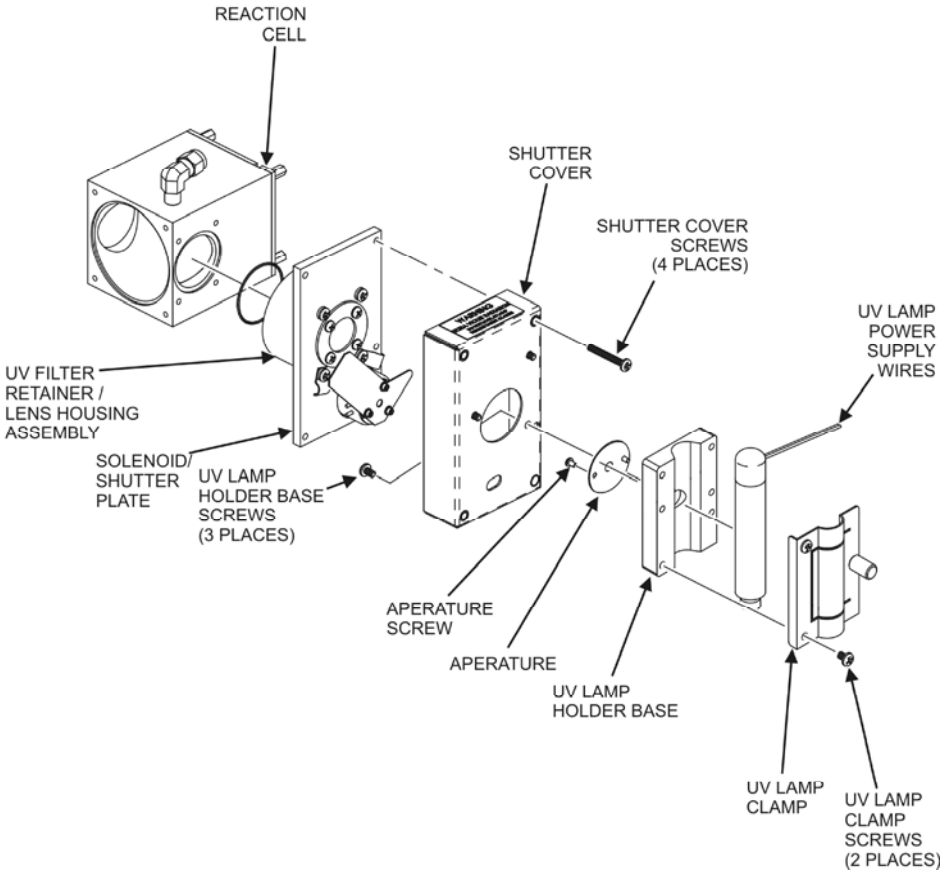

Figure 9-4. Shutter Assembly

CAUTION

ALWAYS wear UV-Protective, Safety Glasses when working with the UV Lamp Assembly.

4.

1. Set the analyzer display to show the signal I/O function, **UVLAMP_SIGNAL**.
2. Slightly loosen the large brass thumbscrew located on the shutter housing (refer to Figure 9-5) so that the lamp can be moved.
3. While watching the **UVLAMP_SIGNAL** reading, slowly rotate the lamp or move it back and forth vertically until the **UVLAMP_SIGNAL** reading is at its maximum.

NOTE

DO NOT grasp the UV lamp by its cap when changing its position. Always grasp the main body of the lamp.

4. Compare the **UVLAMP_SIGNAL** reading to the information in Table 9-2 and follow the instructions there.

Table 9-9. Example of UV Lamp Power Supply Outputs

UVLAMP_SIGNAL	ACTION TO BE TAKEN
3500mV±200mV.	No Action Required
> 4900mV at any time.	Adjust the UV reference detector potentiometer (refer to Figure 9-6) until **UVLAMP_SIGNAL** reads approximately 3600mV before continuing to adjust the lamp position.
>3700mV or < 3300mV	Adjust the UV reference detector potentiometer (refer to Figure 9-6) until **UVLAMP_SIGNAL** reads as close to 3500mV as possible.
.< 600mV	Replace the lamp.

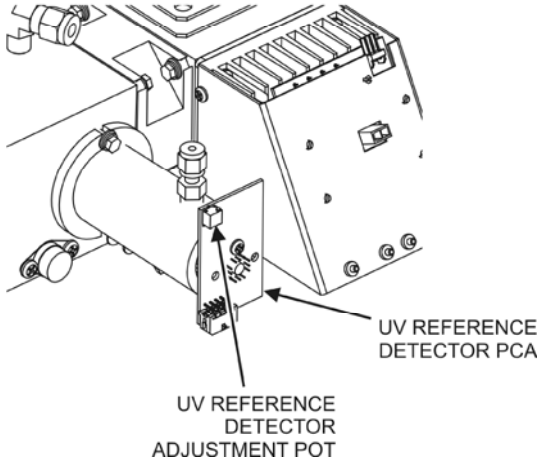

Figure 9-5. Location of UV Reference Detector Potentiometer

5. Finger tighten the thumbscrew.

NOTE

DO NOT over-tighten the thumbscrew.

9.6.3. REPLACING THE UV LAMP

1. Turn off the analyzer.
2. Disconnect the UV lamp from its power supply.
   - You can find the power supply connector by following the two, white UV Lamp power supply wires from the lamp to the power supply.
3. Loosen, but do not remove the two UV lamp bracket screws and the large brass thumbscrew located on the shutter housing (refer to Figure 9-4) so that the lamp can be moved.

NOTE

DO NOT grasp the UV lamp by its cap when changing its position (refer to Figure 9-4). Always grasp the main body of the lamp.

4. Remove the UV Lamp by pulling it straight up.
5. Insert the new UV lamp into the bracket.
6. Tighten the two UV lamp bracket screws, but leave the brass thumb screw un-tightened.
7. Connect the new UV lamp to the power supply.
8. Turn the instrument on and perform the UV adjustment procedure as defined in Section 9.6.2. above.
9. Finger tighten the thumbscrew.

NOTE

DO NOT over-tighten the thumbscrew.

10. Perform a lamp calibration procedure (refer to Section 4.6.6) and a zero point and span point calibration (refer to Section 6).

9.6.4. FACTORY CAL (PMT SENSOR, HARDWARE CALIBRATION)

The sensor module hardware calibration adjusts the slope of the PMT output when the Instrument's slope and offset values are outside of the acceptable range and all other more obvious causes for this problem have been eliminated.

1. Set the instrument reporting range to **SNGL** (Section 4.4.4.4)
2. Perform a full zero calibration using zero air (Sections 6.2, 6.4, or 6.8).
3. Let the instrument run for one hour to stabilize the lamp and run a lamp calibration from the diagnostic menu. This is required to ensure proper scaling of the **NORM PMT** value.
4. Locate the Preamp board (Figure 3-9).
5. Locate the following components on the Preamp board (Figure 9-7):

- HVPS coarse adjustment switch (Range 0-9, then A-F)
- HVPS fine adjustment switch (Range 0-9, then A-F)
- Gain adjustment potentiometer (Full scale is 10 turns).

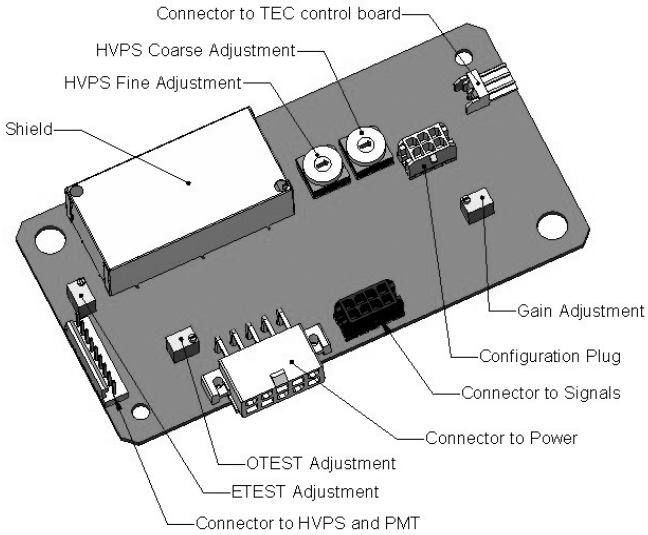

Figure 9-6. Pre-Amplifier Board Layout

6. Turn the gain adjustment potentiometer 12 turns clockwise to its maximum setting.
7. While feeding 400 ppb H_2S (or 80% range value) to the analyzer and waiting until the STABIL value is below 0.5 ppb look at the front panel and scroll to the NORM PMT value. This value should always be two times the span gas concentration in ppb. With 400 ppb H_2S, the NORM PMT should show 800 mV on a properly calibrated analyzer.
8. Set the HVPS coarse adjustment to its minimum setting (0). Set the HVPS fine adjustment switch to its maximum setting (F).
9. Set the HVPS coarse adjustment switch to the lowest setting that will give you more than 800 mV NORM PMT signal. The coarse adjustment typically increments the NORM PMT signal in 100-300 mV steps.
10. Adjust the HVPS fine adjustment such that the NORM PMT value is just above 800 mV. It may be necessary to go back and forth between coarse and fine adjustments if the proper value is at the threshold of the min/max coarse setting.

NOTE

Do not overload the PMT by accidentally setting both adjustment switches to their maximum setting. This can cause permanent damage to the PMT.

11. Adjust the NORM PMT value with the gain potentiometer down to 800±10 mV. This is the final very-fine adjustment.
12. Perform software span and zero calibrations (Sections 6.2, 6.4, or 6.8) to normalize the sensor response to its new PMT sensitivity.
13. Review the slope and offset values, the slopes should be 1.000±0.300 and the offset values should be <250 mV.

9.7. FREQUENTLY ASKED QUESTIONS (FAQS)

The following list contains some of the most commonly asked questions relating to the T101.

QUESTION	ANSWER
Why is the **ZERO** or **SPAN** button not displayed during calibration?	The T101 disables these buttons when the expected span or zero value entered by the users is too different from the gas concentration actually measured value at the time. This is to prevent the accidental recalibration of the analyzer to an out-of-range response curve.-EXAMPLE: The span set point is 400 ppb but gas concentration being measured is only 50 ppb.
Why does the **ENTR** button sometimes disappear on the Front Panel Display?	During certain types of adjustments or configuration operations, the **ENTR** button will disappear if you select a setting that is nonsensical (such as trying to set the 24-hour clock to 25:00:00) or out of the allowable range for that parameter (such as selecting a DAS hold off period of more than 20 minutes).-Once you adjust the setting in question to an allowable value, the **ENTR** button will re-appear.
How do I enter or change the value of my Span Gas?	Press the **CONC** button found under the **CAL** or **CALS** menus of the main SAMPLE menu to enter the expected SO_2 span concentration.
Can I automate the calibration of my analyzer?	Any analyzer with zero/span valve or IZS option can be automatically calibrated using the instrument's AutoCal feature.-However, the accuracy of the IZS option's permeation tube is ±5%. While this may be acceptable for basic calibration checks, the IZS option is not permitted as a calibration source in applications following US EPA protocols. -To achieve highest accuracy, it is recommended to use cylinders of calibrated span gases in combination with a zero air source. Teledyne API offers a zero air generator Model 701 and a gas dilution calibrator Model T700 for this purpose.
What do I do if the concentration on the instrument's front panel display does not match the value recorded or displayed on my data logger even if both instruments are properly calibrated?	This most commonly occurs for one of the following reasons: -A difference in circuit ground between the analyzer and the data logger or a wiring problem; -A scale problem with the input to the data logger. -The analog outputs of the T101 can be manually adjusted to compensate for either or both of these effects, refer to 4.6.3.4; -The analog outputs are not calibrated, which can happen after a firmware upgrade. -Both the electronic scale and offset of the analog outputs can be adjusted (refer to Section 4.6.3.2). Alternately, use the data logger itself as the metering device during calibrations procedures.
How do I perform a leak check?	Refer to Section 9.5.1.
How do I measure the sample flow?	Sample flow is measured by attaching a calibrated flow meter to the sample inlet port when the instrument is operating. The sample flow should be 650 cm^3/min ±10%. Section 9.5.2 includes detailed instructions on performing a check of the sample gas flow.

QUESTION	ANSWER
How often do I need to change the particulate filter?	Once per week. Table 8-1 contains a maintenance schedule listing the most important, regular maintenance tasks.
What is the averaging time for a T101?	The default averaging time, optimized for ambient pollution monitoring, is 240 seconds for stable concentrations and 20 seconds for rapidly changing concentrations; Refer to 10.7.1 for more information.
My analyzer has the optional, user -configurable analog output channels. How do I program and use them?	Instructions for this can be found in the Manual Addendum for Configurable Analog Output, PN 06270.
How long does the sample pump last?	The sample pump should last about one year and the pump diaphragms should to be replaced annually or when necessary. Use the **PRES** test function displayed via the front panel to see if the diaphragm needs replacement (refer to Section 9.1.2).
Do I need a strip chart recorder or external data logger?	No, the T101 is equipped with a very powerful internal data acquisition system (DAS). Section 4.8 describes the setup and operation in detail.

14.

9.8. TECHNICAL ASSISTANCE

If this manual and its trouble-shooting / repair sections do not solve your problems, technical assistance may be obtained from Teledyne API, Technical Support, 9480 Carroll Park Drive, San Diego, CA 92121. Phone: +1 858 657 9800 or 1-800 324 5190. Fax: +1 858 657 9816. Email: sda_techsupport@teledyne.com.

Before you contact Technical Support, fill out the problem report form in Appendix C, which is also available online for electronic submission at http://www.teledyne-api.com/forms/index.asp.

This page intentionally left blank.

10. PRINCIPLES OF OPERATION

The T101 UV Fluorescence H_2S Analyzer is a microprocessor controlled analyzer that determines the concentration of hydrogen sulfide (H_2S), in a sample gas drawn through the instrument It requires that sample and calibration gases be supplied at ambient atmospheric pressure in order to establish a constant gas flow through the sample chamber where the H_2S in the sample gas is converted into SO_2 which is then exposed to ultraviolet light causing the SO_2 molecules to change to an excited state (SO_2*). As these SO_2* molecules decay back into SO_2, they fluoresce. The instrument measures the amount of fluorescence to determine the amount of SO_2 is present in the sample chamber and by inference therefore the amount of H_2S present in the sample gas.

Calibration of the instrument is performed in software and usually does not require physical adjustments to the instrument. During calibration, the microprocessor measures the sensor output signal when gases with known amounts of H_2S at various concentrations are supplied and stores these measurements in memory. The microprocessor uses these calibration values along with other performance parameters such as the PMT dark offset, UV lamp ratio and the amount of stray light present and measurements of the temperature and pressure of the sample gas to compute the final H_2S concentration.

This concentration value and the original information from which it was calculated are stored in the unit's internal data acquisition system and reported to the user through a vacuum fluorescent display or as electronic data via several communication ports.

This concentration value and the original information from which it was calculated are stored in the unit's internal data acquisition system (DAS Section 4.8) and reported to the user through a vacuum fluorescent display or several communication ports.

10.1. MEASUREMENT PRINCIPLE

10.1.1. H_2S CONVERSION

The T101 H_2S analyzer is basically a SO_2 analyzer with a $H_2S \rightarrow SO_2$ conversion stage inserted into the gas stream before the sample gas enters the sample chamber.

The H_2S to SO_2 converter receives sample gas from which the SO_2 has been removed by a scrubber. Once the naturally occurring SO_2 is removed from the sample gas, the special converter changes the H_2S in the sample stream to SO_2 using a high-temperature catalytic oxidation.

The chemical process is:

$$2H_2S + 3O_2 \longrightarrow 2H_2O + 2SO_2$$

The converter is a heated stainless steel core containing a catalyst across which the sample gas passes just before induction into the reaction cell. The temperature of the converter is maintained by a heater controlled by the CPU via the I^2C bus and the relay card. The converter is enclosed in high-temperature insulation and encased in a stainless steel housing.

The converter is most efficient when it operates at 315°C, converting 95% of the H_2S into SO_2. Converter temperature is viewable via the front panel as the test function **CONV TEMP** (see Section 4.2.1) and can also be output via the test channel analog output (see Section 4.6.9). A warning message, **CONV TEMP WARNING** (see Section 4.2.2) will be issued by the CPU if the converter's temperature is below 310°C or above 320°C.

When the converter is operating at peak efficiency there is a nearly 1:1 relationship between the amount of H_2S entering the catalytic converter and the amount of SO_2 leaving it. Therefore, by measuring the amount of SO_2 in the gas after it leaves the converter, the amount of H_2S originally present on the sample gas can be directly inferred. This is accomplished by measuring the ultraviolet fluorescence of the SO_2 in the sample chamber.

10.1.2. SO_2 ULTRAVIOLET FLUORESCENCE

The physical principle upon which the T101's measurement method is based is the fluorescence that occurs when Sulfur dioxide (SO_2) is changed to excited state (SO_2*) by ultraviolet light with wavelengths in the range of 190 nm - 230 nm. This reaction is a two-step process.

The first stage (Equation 10-1) occurs when SO_2 molecules are struck by ultraviolet photons (hv) of the appropriate wavelength. (In the case of the Model T101, a band pass filter between the source of the UV light and the affected gas limits the wavelength of the UV light to approximately 214 nm.) The SO_2 absorbs some of the energy from the UV light, causing one of the electrons of each affected SO_2 molecule to move to a higher energy orbital state (**SO_2***).

$$SO_2 + h\nu_{214nm} \xrightarrow{Ia} SO_2 *$$

(Equation 10-1)

The amount of SO_2 converted to SO_2* in the sample chamber is dependent on the average intensity of the UV light (***Ia)*** and not its peak intensity because the intensity of UV light is not constant in every part of the sample chamber. Some of the photons are absorbed by the SO_2 as the light travels through the sample gas.

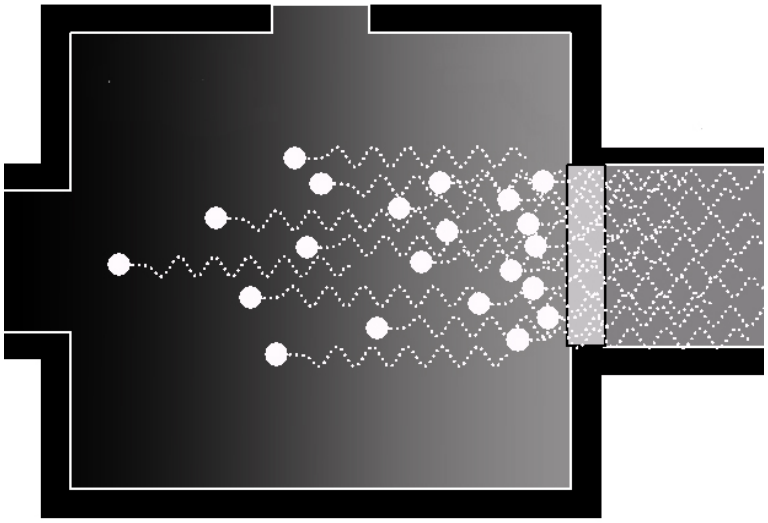

Figure 10-1. UV Absorption

The equation for defining the average intensity of the UV light (***Ia***) is:

$$Ia = I_0\left[1 - exp\left(-ax\left(SO_2\right)\right)\right]$$

Where: **(Equation 10-2)**

I_0 = Intensity of the excitation UV light.

a = The absorption coefficient of SO_2.

SO_2 = Concentration of SO_2 in the sample chamber.

x = The distance between the UV source and the SO_2 molecule(s) being affected (path length).

The second stage of this reaction occurs after the SO_2 reaches its excited state (SO_2*). Because the system will seek the lowest available stable energy state, the SO_2* molecule quickly returns to its ground state (Equation 10-3) by giving off the excess energy in the form of a photon (*h*v). The wavelength of this fluoresced light is also in the ultraviolet band but at a longer (lower energy) wavelength centered at 330nm.

$$SO_2 * \longrightarrow SO_2 + hv_{330nm}$$

(Equation 10-3)

The amount of detectable UV (***F***) given off by the decay of the SO_2* is affected by the rate at which this reaction occurs (***k***).

$$F = k(SO_2 *)$$

Where:

F	=	the amount of fluorescent light given off.
k	=	The rate at which the SO_2* decays into SO_2.
SO_2*	=	Amount of excited state SO_2 in the sample chamber.

Therefore:

$$SO_2 * \xrightarrow{kF} SO_2 + hv_{330nm}$$

Furthermore, the function (k) is affected by the temperature of the gas. The warmer the gas, the faster the individual molecules decay back into their ground state and the more photons of UV light are given off per unit of time.

Given that the absorption rate (a) of SO_2 is constant, the amount of fluorescence (F) is a result of:

- The amount of SO_2* created which is affected by the variable factors from equation 10-2 above: concentration of SO_2; intensity of UV light (***I_0***); path length of the UV light (***x***) and;
- The amount of fluorescent light created which is affected by the variable factors from equation 10-5: the amount of SO_2* present and the rate of decay (***k***) which changes based on the temperature of the gas.

The amount of fluorescent light emitted (***F***) is directly related to the concentration of the SO_2 in the Sample Chamber, when:

- the intensity of the light (***I_0***) is known
- the path length of excitation light is short (***x***)
- the temperature of the gas is known and compensated for so that the rate of SO_2*decay is constant (***k***)
- there are no interfering conditions present (such as interfering gases or stray light)

The Model T101 UV Fluorescence SO_2 Analyzer is specifically designed to create these circumstances.

- The light path is very short.
- The optical design reduces the effects of stray light geometrically and spectrally.
- A special hydrocarbon scrubber removes the most common interfering gases from the sample gas.
- A reference detector measures the intensity of the available excitation UV light and is used to remove effects of lamp drift.
- Finally, the temperature of the sample gas is measured and controlled via heaters attached to the sample chamber.

The net result is that any variation in UV fluorescence can be directly attributed to changes in the concentration of SO_2 in the sample gas.

10.2. THE UV LIGHT PATH

The optical design of the Model T101's sample chamber optimizes the fluorescent reaction between SO_2 and UV Light (Figure 10-2) and assures that only UV light resulting from the decay of SO_2* into $_{SO2}$ is sensed by the instrument's fluorescence detector.

UV radiation is generated by a lamp specifically designed to produce a maximum amount of light of the wavelength needed to excite SO_2 into SO_2* (330 nm) and a special reference detector circuit constantly measures lamp intensity (see Equation 10-2). A Photo Multiplier Tube (PMT) detects the UV given off by the SO_2* decay (214 nm) and outputs an analog signal. Several focusing lenses and optical filters make sure that both detectors are exposed to an optimum amount of only the right wavelengths of UV. To further assure that the PMT only detects light given off by decaying SO_2* the pathway of the excitation UV and field of view of the PMT are perpendicular to each other and the inside surfaces of the sample chamber are coated with a layer of black Teflon® that absorbs stray light.

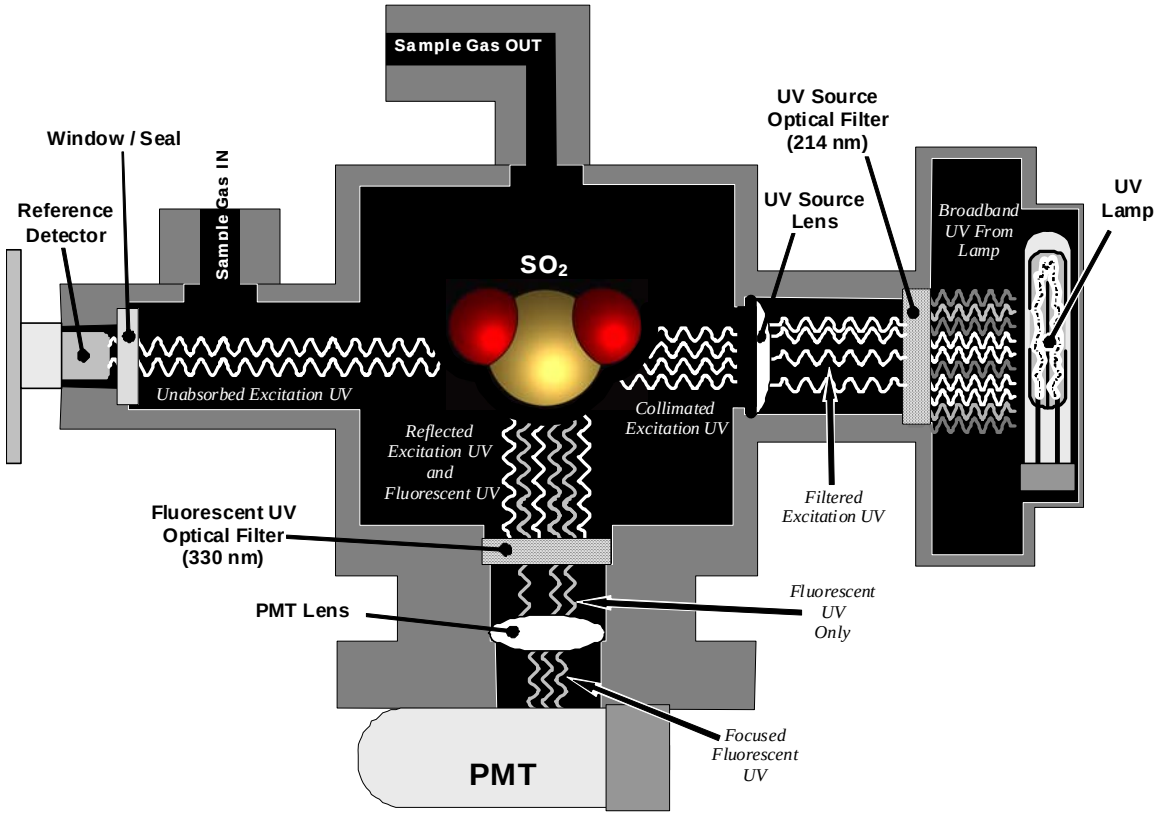

Figure 10-2. UV Light Path

10.2.1. UV SOURCE LAMP

The source of excitation UV light for the Model T101 is a low pressure zinc-vapor lamp. An AC voltage heats up and vaporizes zinc contained in the lamp element creating a light-producing plasma arc. Zinc-vapor lamps are preferred over the more common mercury-vapor lamps for this application because they produce very strong emission levels at the wavelength required to convert SO_2 to SO_2*, 214.3 nm (see Figure 10-4).

The lamp used in the Model T101 is constructed with a vacuum jacket surrounding a double-bore lamp element (Figure 10-3). The vacuum jacket isolates the plasma arc from most external temperature fluctuations. The jacket also contains the thermal energy created by the lamps operation thereby helping the lamp heat up to and maintain proper vaporization temperature. Light is emitted through a 20 mm x 5 mm portal.

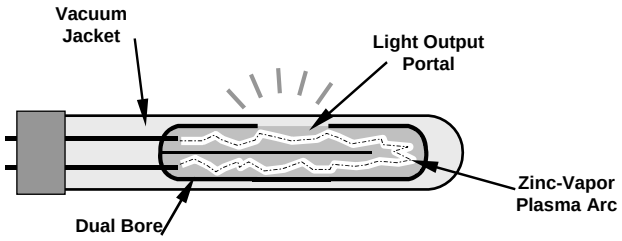

Figure 10-3. Source UV Lamp Construction

10.2.2. THE REFERENCE DETECTOR

A vacuum diode UV detector that converts UV light to a DC current is used to measure the intensity of the excitation UV source lamp. Its location, directly across from the source lamp at the back of a narrow tube-shaped light trap, places it directly in the path of the excitation UV light. A window transparent to UV light provides an air-proof seal that prevents ambient gas from contaminating the sample chamber. The shape of the light trap and the fact that the detector is blind to wavelengths other than UV means no extra optical filtering is needed.

10.2.3. THE PMT

The amount of fluoresced UV produced in the sample chamber is much less than the intensity of excitation UV source lamp (see Figure 10-4). Therefore a much more sensitive device is needed to detect this light with enough resolution to be meaningful. The Model T101 uses a Photo Multiplier Tube or PMT for this purpose (see 10.4.4 for more details regarding the electronic operation of the PMT).

10.2.4. OPTICAL FILTERS

The Model T101 analyzer uses two stages of optical filters to enhance performance. The first stage conditions the UV light used to excite the SO_2 by removing frequencies of light that are not needed to produce SO_2*. The second stage protects the PMT detector from reacting to light not produced by the SO_2* returning to its ground state.

10.2.4.1. UV Source Optical Filter

Zinc-vapor lamps output light at other wavelengths beside the 214nm required for the SO_2 → SO_2* transformation including a relatively bright light of the same wavelength at which SO_2* fluoresces as it returns to its SO_2 ground state (330 nm). In fact, the intensity of the light emitted by the UV lamp at 330nm is so bright, nearly five orders of magnitude brighter than that resulting from the SO_2* decay, it would drown out the SO_2* fluorescence.

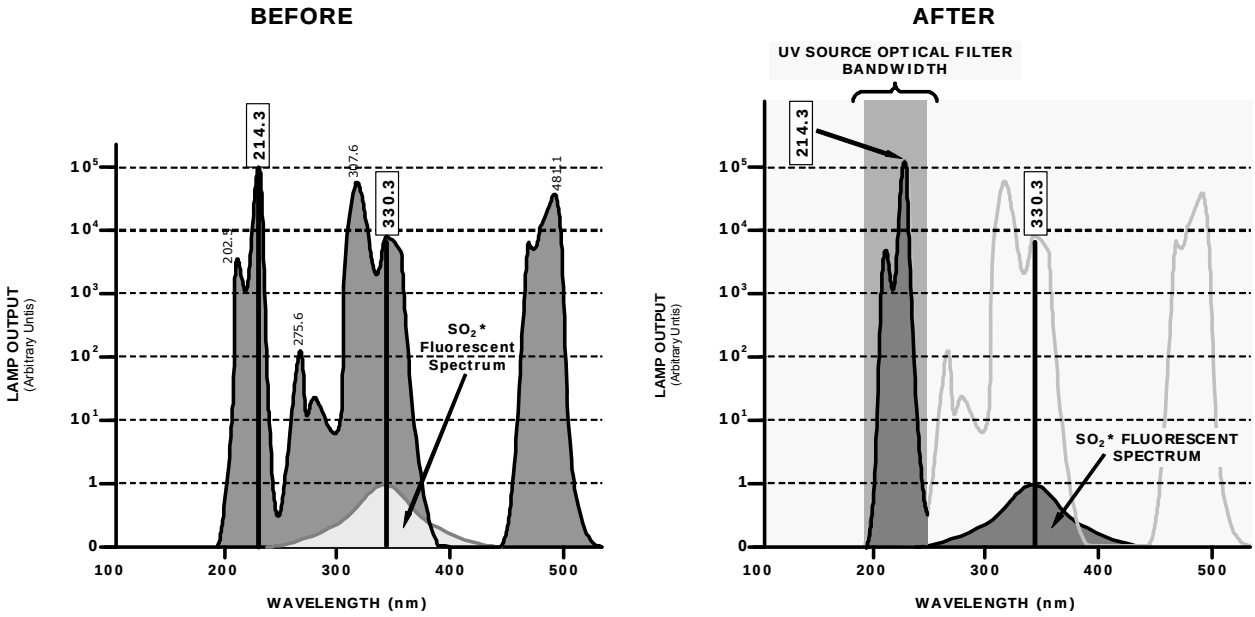

Figure 10-4. Excitation Lamp UV Spectrum Before/After Filtration

To solve this problem, the light emitted by the excitation UV lamp passes through a bandpass filter that screens out photons with wavelengths outside the spectrum required to excite SO_2 into SO_2*. (Figure 10-4).

10.2.4.2. PMT Optical Filter

The PMT used in the Model T101 reacts to a wide spectrum of light which includes much of the visible spectrum and most of the UV spectrum. Even though the 214 nm light used to excite the SO_2 is focused away from the PMT, some of it scatters in the direction of the PMT as it interacts with the sample gas. A second optical bandpass filter placed between the sample chamber (see Figure 10-2) and the PMT strips away light outside of the fluorescence spectrum of decaying SO_2* (see Figure 10-5) including reflected UV form the source lamp and other stray light.

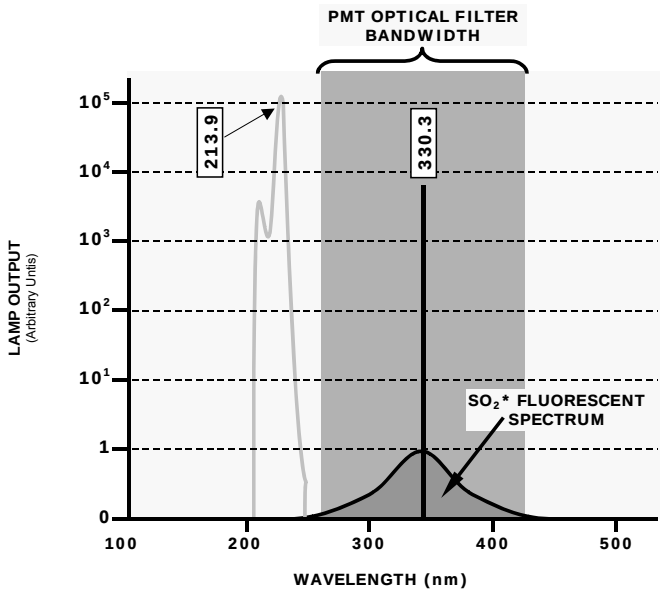

Figure 10-5. PMT Optical Filter Bandwidth

10.2.5. OPTICAL LENSES

Two optical lenses are used to focus and optimize the path of light through the sample chamber.

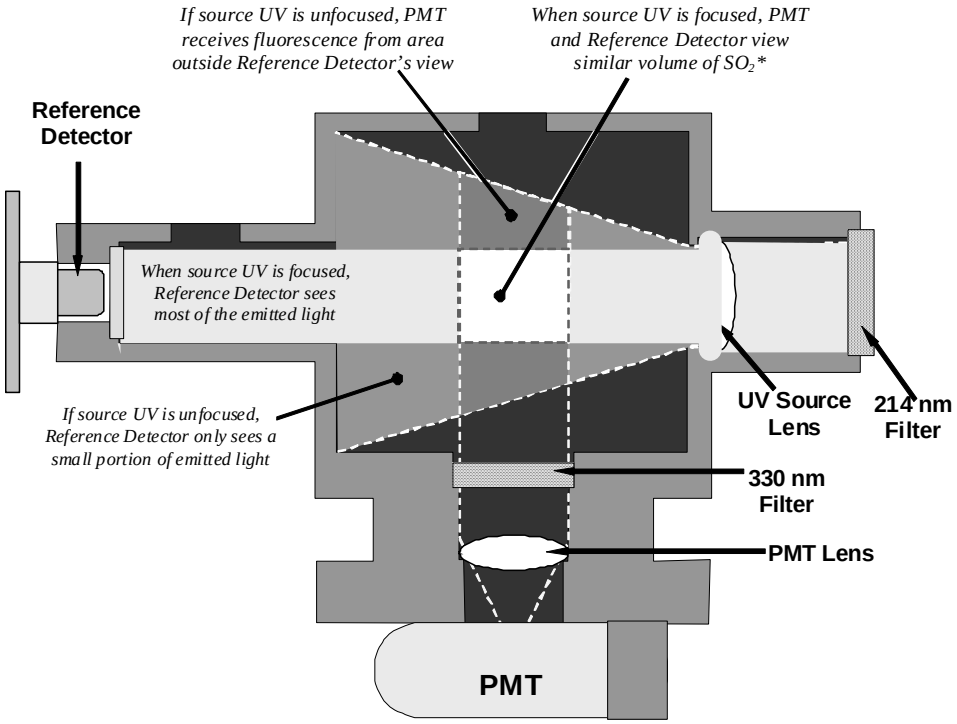

Figure 10-6. Effects of Focusing Source UV in Sample Chamber

A lens located between PMT and the sample chamber collects as much of the fluoresced UV created there as possible and focuses it on the most sensitive part of the PMT's photo cathode.

Another lens located between the excitation UV source lamp and the sample chamber collimates the light emitted by the lamp into a steady, circular beam and focuses that beam directly onto the reference detector. This allows the reference detector to accurately measure the effective intensity of the excitation UV by:

Eliminating the effect of reflected light from the UV lamp reaching the PMT.

Making sure that all of the light emitted by the source lamp, passed though the 214 nm filter and not absorbed by the SO_2 reaches the reference detector. Conversely, this also makes sure that the volume of sample gas affected by the excitation beam is similar to the volume of fluorescing SO_2* being measured by the PMT, eliminating a possible source of measurement offset.

10.2.6. MEASUREMENT INTERFERENCES

It should be noted that the fluorescence method for detecting H_2S is subject to interference from a number of sources. The T101 has been successfully tested for its ability to reject interference from most of these sources.

10.2.6.1. Direct Interference

Obviously, since the T101 measures H_2S by converting it to SO_2, the most significant interfering gas for this measurement would be ambient SO_2 that is present in the sample gas. The T101 circumvents this by passing the sample gas through a chemical scrubber that removes all SO_2 from the sample gas before the $H_2S \rightarrow SO_2$ conversion takes place. This ensures that the only SO_2 present in the sample chamber is the result of the $H_2S \rightarrow SO_2$ conversion. Obviously to make sure that the analyzer operates correctly it is important to make sure that this scrubber is functioning properly.

The second most common source of interference is from other gases that fluoresce in a similar fashion to SO_2 when exposed to UV Light. The most significant of these is a class of hydrocarbons called poly-nuclear aromatics (PNA) of which xylene and naphthalene are two prominent examples. Nitric oxide fluoresces in a spectral range near to SO_2. For critical applications where high levels of NO are expected an optional optical filter is available that improves the rejection of NO (contact Technical Support for more information).

The Model T101 Analyzer has several methods for rejecting interference from these gasses.

A special scrubber (kicker) mechanism removes any PNA chemicals present in the sample gas before it the reaches the sample chamber.

The exact wavelength of light needed to excite a specific non-SO_2 fluorescing gas is removed by the source UV optical filter.

The light given off by Nitrogen Oxide and many of the other fluorescing gases is outside of the bandwidth passed by the PMT optical filter.

10.2.6.2. UV Absorption by Ozone

Because ozone absorbs UV Light over a relatively broad spectrum it could cause a measurement offset by absorbing some of the UV given off by the decaying SO_2* in the sample chamber. The Model T101 prevents this from occurring by having a very short light path between the area where the SO_2* fluorescence occurs and the PMT detector. Because the light path is so short, the amount of O_3 needed to cause a noticeable effect would be much higher than could be reasonably expected in any application for which this instrument is intended.

10.2.6.3. Dilution

Certain gases with higher viscosities can lower the flow rate though the critical flow orifice that controls the movement of sample gas though the analyzer reducing the amount of sample gas in the sample chamber and thus the amount of SO_2 available to react with the to the UV light. While this can be a significant problem for some analyzers, the design of the Model T101 is very tolerant of variations in sample gas flow rate and therefore does not suffer from this type of interference.

10.2.6.4. Third Body Quenching

While the decay of SO_2* to SO_2 happens quickly, it is not instantaneous. Because it is not instantaneous it is possible for the extra energy possessed by the excited electron of the SO_2* molecule to be given off as kinetic energy during a collision with another molecule. This in effect heats the other molecule slightly and allows the excited electron to move into a lower energy orbit without emitting a photon.

The most significant interferents in this regard are nitric oxide (NO), carbon dioxide (CO_2), water vapor (H_2O) and molecular oxygen (O_2). In ambient applications the quenching effect of these gasses is negligible. For stack applications where the concentrations of some or all of these may be very high, specific steps MUST be taken to remove them from the sample gas before it enters the analyzer.

10.2.6.5. Light Pollution

Because T101 measures light as a means of calculating the amount of SO_2 present, obviously stray light can be a significant interfering factor. The Model T101 removes this interference source in several ways.

The sample chamber is designed to be completely light tight to light from sources other than the excitation UV source lamp.

All pneumatic tubing leading into the sample chamber is completely opaque in order to prevent light from being piped into the chamber by the tubing walls.

The optical filters discussed in section 10.2.4; remove UV with wavelengths extraneous to the excitation and decay of SO_2/SO_2*.

During instrument calibration, when the analyzer is sampling zero air (calibration gas devoid of H_2S) a measurement of the background light that is still present in the sample chamber is recorded and used to offset the value of the PMT output used to calculate the H_2S concentration.

10.3. PNEUMATIC OPERATION

CAUTION

It is important that the sample airflow system is leak-tight and not pressurized over ambient pressure. Regular leak checks should be performed on the analyzer as described in the maintenance schedule, Table 8-1. Procedures for correctly performing leak checks can be found in Section 9.5.1.

NOTE

Relative Pressure versus Absolute Pressure

In this manual vacuum readings are given in inches of mercury absolute pressure (in-Hg-A), i.e. indicate an absolute pressure referenced against zero (a perfect vacuum).

10.3.1. SAMPLE GAS FLOW

The flow of gas through the T101 UV Fluorescence H_2S Analyzer is created by a small internal pump that pulls air though the instrument.

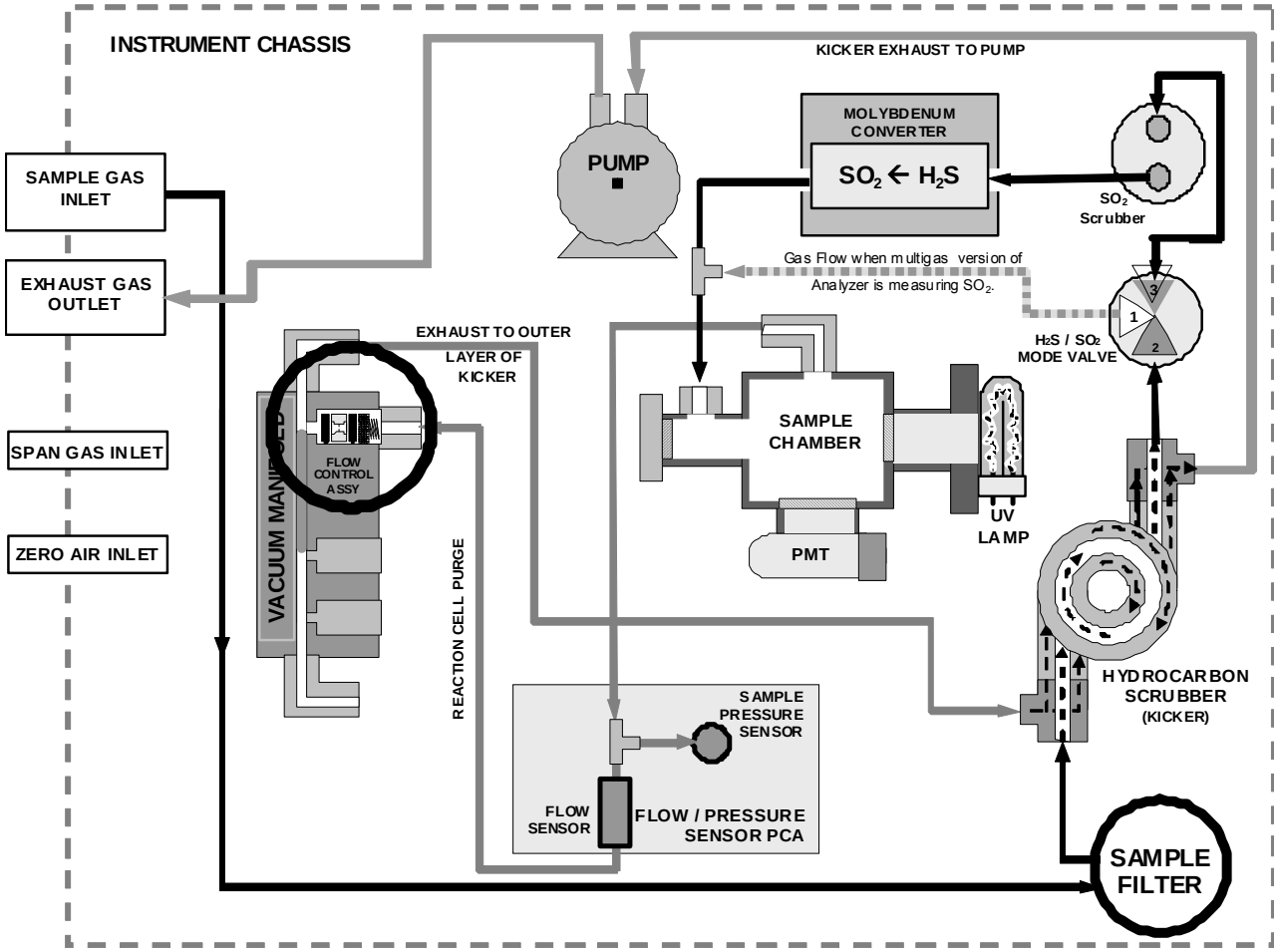

Figure 10-7. T101 Gas Flow and Location of Critical Flow Orifice

10.3.2. MULTIGAS MEASUREMENT & $H_2S \rightarrow SO_2$ SWITCHING VALVE.

When activated for operation the multigas measurement mode allows the instrument to measure either or both H_2S or SO_2 via a Teflon® switching valve. This valve, under CPU control via the I^2C buss and the relay board, directs the sample gas stream either through the SO_2 scrubber and $H_2S \rightarrow SO_2$ converter (H_2S measurement mode) or directly to the sample chamber bypassing the $H_2S \rightarrow SO_2$ converter, allowing the analyzer to measure SO_2. The cycle for this operation is

Table 10-1. T101 Multigas Valve Cycle-Phases

Gas Mode	$H_2S \rightarrow SO_2$ Valve Status	Default Time Settings	Activity
H_2S	Gas stream directed through scrubber and converter	0 – 3 minutes	Wait period. Ensures sample chamber has been flushed of previous gas.
		3 – 10 m	Analyzer measures florescence in sample chamber
SO_2	Gas stream bypasses through scrubber and converter	0 – 3 minutes	Wait period (dwell time). Ensures sample chamber has been flushed of previous gas.
		3 – 10 m	Analyzer measures florescence in sample chamber
Cycle repeats every ~20Minuites			

The timing of the above cycle is set by two variables (see Appendix A-2), **MEASURE_PERIOD,** which sets the total dwell time for each gas mode, and **MEASURE_DELAY** which sets the wait period before the instrument begins making measurements after the gas mode has been switch.

10.3.3. FLOW RATE CONTROL

The Model T101 uses a special flow control assembly located in the exhaust vacuum manifold (Figure 10-7) to maintain a constant flow rate of the sample gas through the instrument. This assembly consists of:

- a critical flow orifice
- two o-rings: Located just before and after the critical flow orifice, the o-rings seal the gap between the walls of assembly housing and the critical flow orifice.
- a spring: Applies mechanical force needed to form the seal between the o-rings, the critical flow orifice and the assembly housing.

10.3.3.1. Critical Flow Orifice

The most important component of this flow control assembly is the critical flow orifice.

Critical flow orifices are a remarkably simple way to regulate stable gas flow rates. They operate without moving parts by taking advantage of the laws of fluid dynamics. By restricting the flow of gas though the orifice, a pressure differential is created. This

pressure differential combined with the action of the analyzer's external pump draws the gas through the orifice.

As the pressure on the downstream side of the orifice (the pump side) continues to drop, the speed that the gas flows though the orifice continues to rise. Once the ratio of upstream pressure to downstream pressure is greater than 2:1, the velocity of the gas through the orifice reaches the speed of sound. As long as that ratio stays at least 2:1 the gas flow rate is unaffected by any fluctuations, surges, or changes in downstream pressure because such variations only travel at the speed of sound themselves and are therefore cancelled out by the sonic shockwave at the downstream exit of the critical flow orifice.

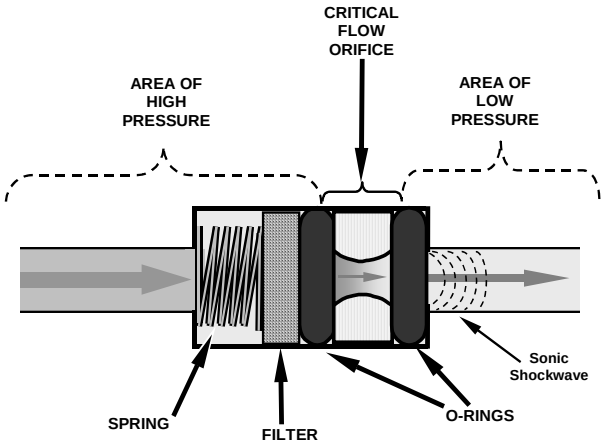

Figure 10-8. Typical Flow Control Assembly with Critical Flow Orifice

The actual flow rate of gas through the orifice (volume of gas per unit of time), depends on the size and shape of the aperture in the orifice. The larger the hole, the more gas molecules, moving at the speed of sound, pass through the orifice.

The result is that he flow rate of the gas is unaffected by degradations in pump efficiency due to age.

The critical flow orifice used in the Model T101 is designed to provide a flow rate of 600 cm3/min.

10.3.4. SAMPLE PARTICULATE FILTER

To remove particles in the sample gas, the analyzer is equipped with a Teflon membrane filter of 47 mm diameter (also referred to as the sample filter) with a 1 µm pore size. The filter is accessible through the front panel, which folds down, and should be changed according to the suggested maintenance schedule in Table 9-1.

10.3.5. HYDROCARBON SCRUBBER (KICKER)

It is very important to make sure the air supplied to sample the chamber is clear of hydrocarbons. To accomplish this task the T101 uses a single tube permeation scrubber. The scrubber consists of a single tube of a specialized plastic that absorbs hydrocarbons very well. This tube is located within the outer flexible plastic tube shell. As gas flows through the inner tube, hydrocarbons are absorbed into the membrane walls. and transported through the membrane wall and into the hydrocarbon free, purge gas flowing through the outer tube. This process is driven by the hydrocarbon partial pressure gradient between the inner and outer tubes.

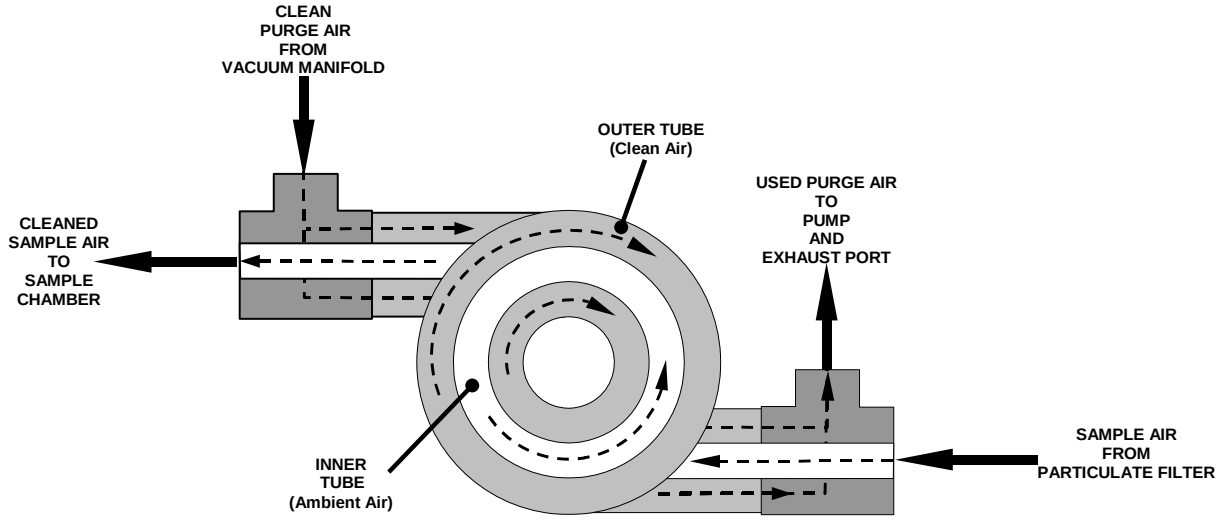

Figure 10-9. T101 Hydrocarbon Scrubber (Kicker)

In the T101 some of the cleaned air from the inner tube is returned to be used as the purge gas in the outer tube (Figure 10-9). This means that when the analyzer is first started, the concentration gradient between the inner and outer tubes is not very large and the scrubber's efficiency is relatively low. When the instrument is turned on after having been off for more than 30 minutes, it takes a certain amount of time for the gradient to become large enough for the scrubber to adequately remove hydrocarbons from the sample air.

10.3.6. SO_2 SCRUBBER

In order to ensure that no ambient SO_2 interferes with the analyzer's H_2S measurement the sample gas stream is passed through a chemical scrubber that removes SO_2 from the sample stream before it is passed though the catalytic converter (see Figure 10-7).

The SO_2 scrubber is a Teflon encased, stand-alone unit containing a room-temperature tube mounted in the front right side of the analyzer case (see Figure 3.8) near the instrument's on/off switch.

The SO_2 scrubber material is consumed as it removes SO_2. If the expected concentrations of SO_2 are very high, the lifetime of the scrubber will be short. The expected life of the scrubber is approximately 1000 ppm-hours. See Section 8.3.3 for information on when and how to replace the SO_2 scrubber material)

10.3.7. PNEUMATIC SENSORS

The T101 uses two pneumatic sensors to verify gas streams. These sensors are located on a printed circuit assembly, called the pneumatic pressure/flow sensor board.

10.3.7.1. Sample Pressure Sensor

An absolute pressure transducer plumbed to the input of the analyzer's sample chamber is used to measure the pressure of the sample gas before it enters the chamber. This upstream used to validate the critical flow condition (2:1 pressure ratio) through the instrument's critical flow orifice (Section 10.3.3.1). Also, if the temperature/pressure compensation (TPC) feature is turned on (Section 10.7.3), the output of this sensor is also used to supply pressure data for that calculation.

The actual pressure measurement is viewable through the analyzer's front panel display as the test function **PRESS**.

10.3.7.2. Sample Flow Sensor

A thermal-mass flow sensor is used to measure the sample flow through the analyzer. This sensor is also mounted on the pneumatic pressure/flow sensor board upstream of the sample chamber. The flow rate is monitored by the CRT which issues a warning message (**SAMP FLOW WARN**) if the flow rate is too high or too low.

The flow rate of the sample gas is viewable via the front panel as the **SAMP FL** test function.

10.4. ELECTRONIC OPERATION

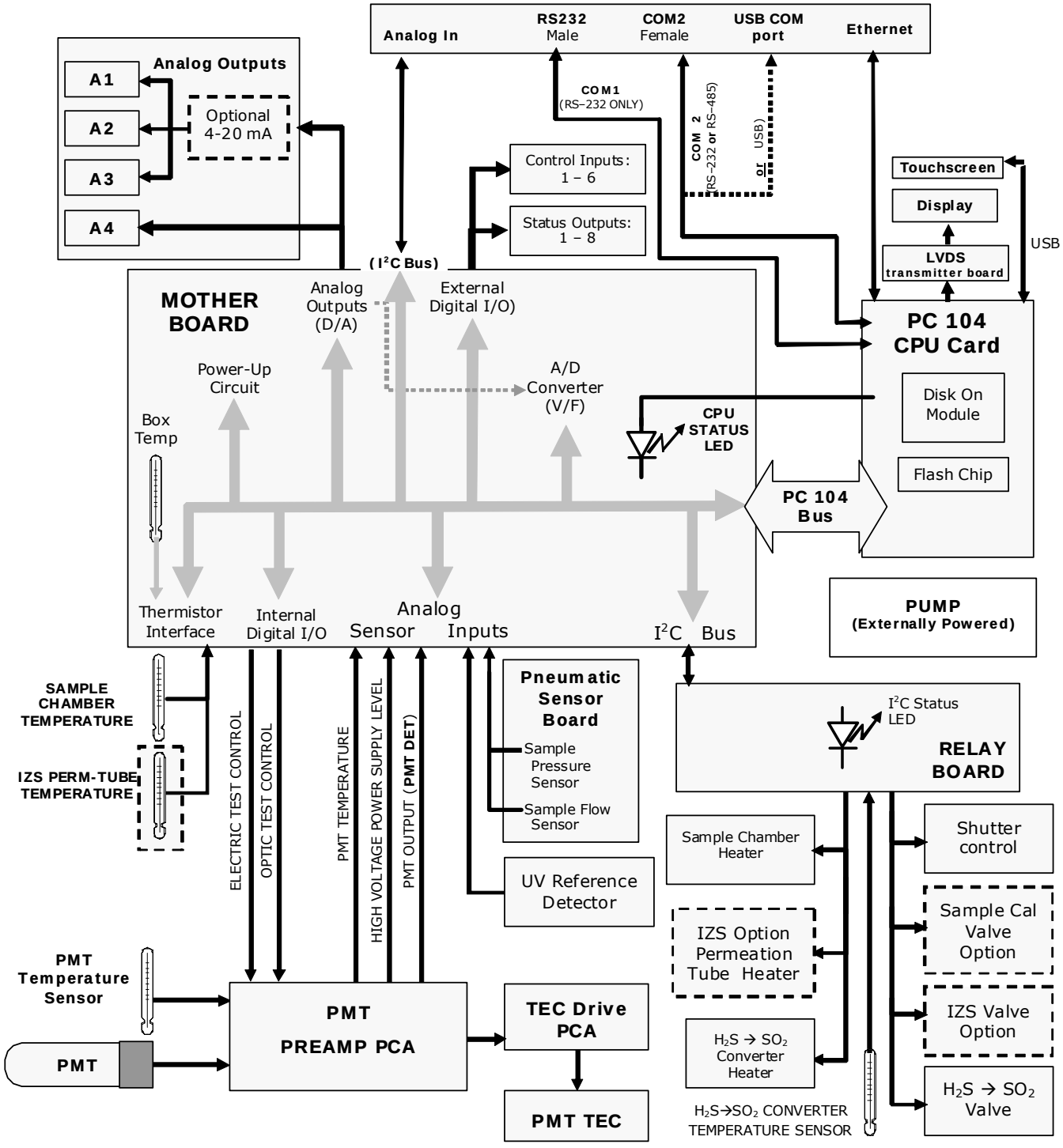

Figure 10-10. T101 Electronic Block Diagram

The core of the analyzer is a microcomputer that controls various internal processes, interprets data, makes calculations, and reports results using specialized firmware developed by Teledyne API. It communicates with the user as well as receives data from and issues commands to a variety of peripheral devices through a separate printed circuit assembly to which the CPU is mounted: the motherboard.

The motherboard is directly mounted to the rear panel and collects data, performs signal conditioning duties and routs incoming and outgoing signals between the CPU and the analyzer's other major components.

Concentration data of the T101 are generated by the photo multiplier tube (PMT), which produces an analog current signal corresponding to the brightness of the fluorescence reaction in the sample chamber. This current signal is amplified to a DC voltage signal (front panel test parameter PMT) by a PMT preamplifier printed circuit assembly (located on top of the sensor housing). PMT is converted to digital data by a bi-polar, analog-to-digital converter, located on the motherboard.

In addition to the PMT signal, a variety of sensors report the physical and operational status of the analyzer's major components, again through the signal processing capabilities of the motherboard. These status reports are used as data for the H_2S concentration calculation (e.g. pressure and temperature reading used by the temperature/pressure compensation feature) and as trigger events for certain warning messages and control commands issued by the CPU. They are stored in the CPU's memory and, in most cases, can be viewed through the front panel display.

The CPU communicates with the user and the outside world in a variety of ways:

- Through the analyzer's keyboard and vacuum fluorescent display over a clocked, digital, serial I/O bus using the I^2C protocol (pronounced "I-squared-C");
- RS 232 & RS485 serial I/O channels;
- Various analog voltage and current outputs and
- Several digital I/O channels.

Finally, the CPU issues commands (also over the I^2C bus) to a series of relays and switches located on a separate printed circuit assembly, the relay board (located in the rear of the chassis on its own mounting bracket) to control the function of key electromechanical devices such as heaters that keep the sample chamber at a steady temperature and, when installed, the zero/span and internal zero/span valve sets and heaters.

10.4.1. CPU

The unit's CPU card, installed on the motherboard located inside the rear panel, is a low power (5 VDC, 720mA max), high performance, Vortex 86SX-based microcomputer running Windows CE. Its operation and assembly conform to the PC 104 specification..

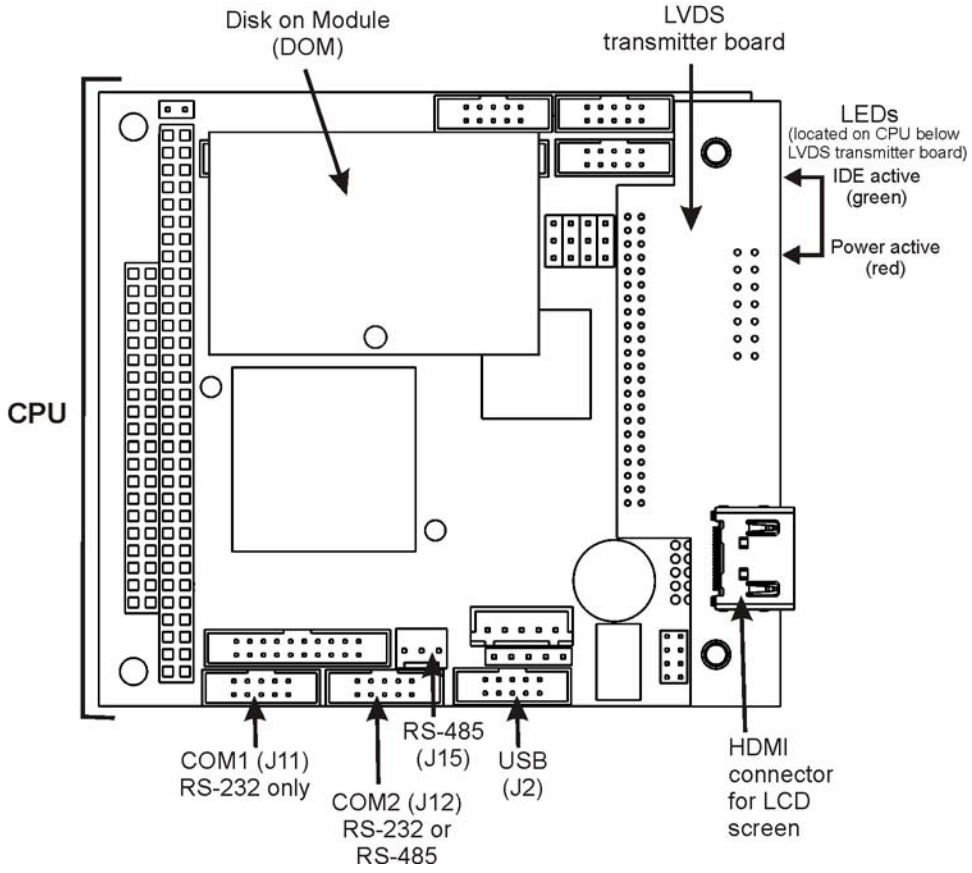

Figure 10-11. T101 CPU Board

The CPU includes two types of non-volatile data storage: a Disk on Module (DOM) and an embedded flash chip.

10.4.1.1. Disk On Module (DOM)

The DOM is a 44-pin IDE flash chip with storage capacity to 256 MB. It is used to store the computer's operating system, the Teledyne API firmware, and most of the operational data generated by the analyzer's internal data acquisition system (DAS).

10.4.1.2. Flash Chip

This non-volatile, embedded flash chip includes 2MB of storage for calibration data as well as a backup of the analyzer configuration. Storing these key data onto a less heavily accessed chip significantly decreases the chance data corruption.

In the unlikely event that the flash chip should fail, the analyzer will continue to operate with just the DOM. However, all configuration information will be lost, requiring that the unit be recalibrated.

10.4.2. SENSOR MODULE & SAMPLE CHAMBER

Electronically, the T101 sensor module is a group of subassemblies with different tasks: to detect the intensity of the light from the fluorescence reaction between SO_2 and UV light in the sample chamber, to produce a current signal proportional to the intensity of the fluorescence and to control the temperature of the PMT cooler to ensure the accuracy and stability of the measurements.

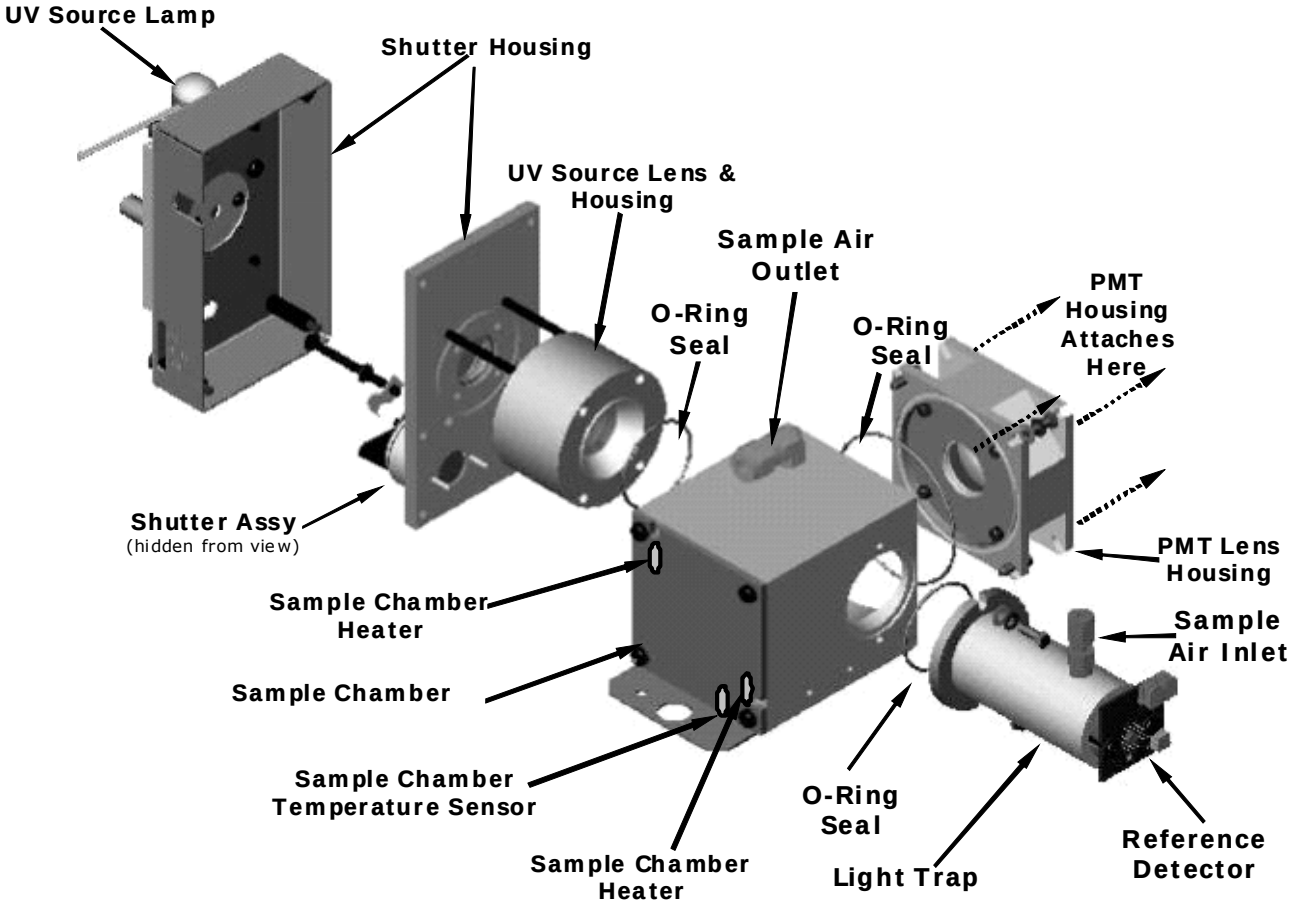

Figure 10-12. T101 Sample Chamber

10.4.3. SAMPLE CHAMBER HEATING CIRCUIT

In order to reduce temperature effects, the sample chamber is maintained at a constant 50°C, just above the high end of the instrument's operation temperature range. Two AC heaters, one embedded into the top of the sample chamber, the other embedded directly below the reference detector's light trap, provide the heat source. These heaters operate off of the instrument's main AC power and are controlled by the CPU through a power relay on the relay board. A thermistor, also embedded in the bottom of the sample chamber, reports the cell's temperature to the CPU through the thermistor interface circuitry of the motherboard.

10.4.4. PHOTO MULTIPLIER TUBE (PMT)

The T101 uses a photo multiplier tube (PMT) to detect the amount of fluorescence created by the SO_2 and UV light reaction in the sample chamber.

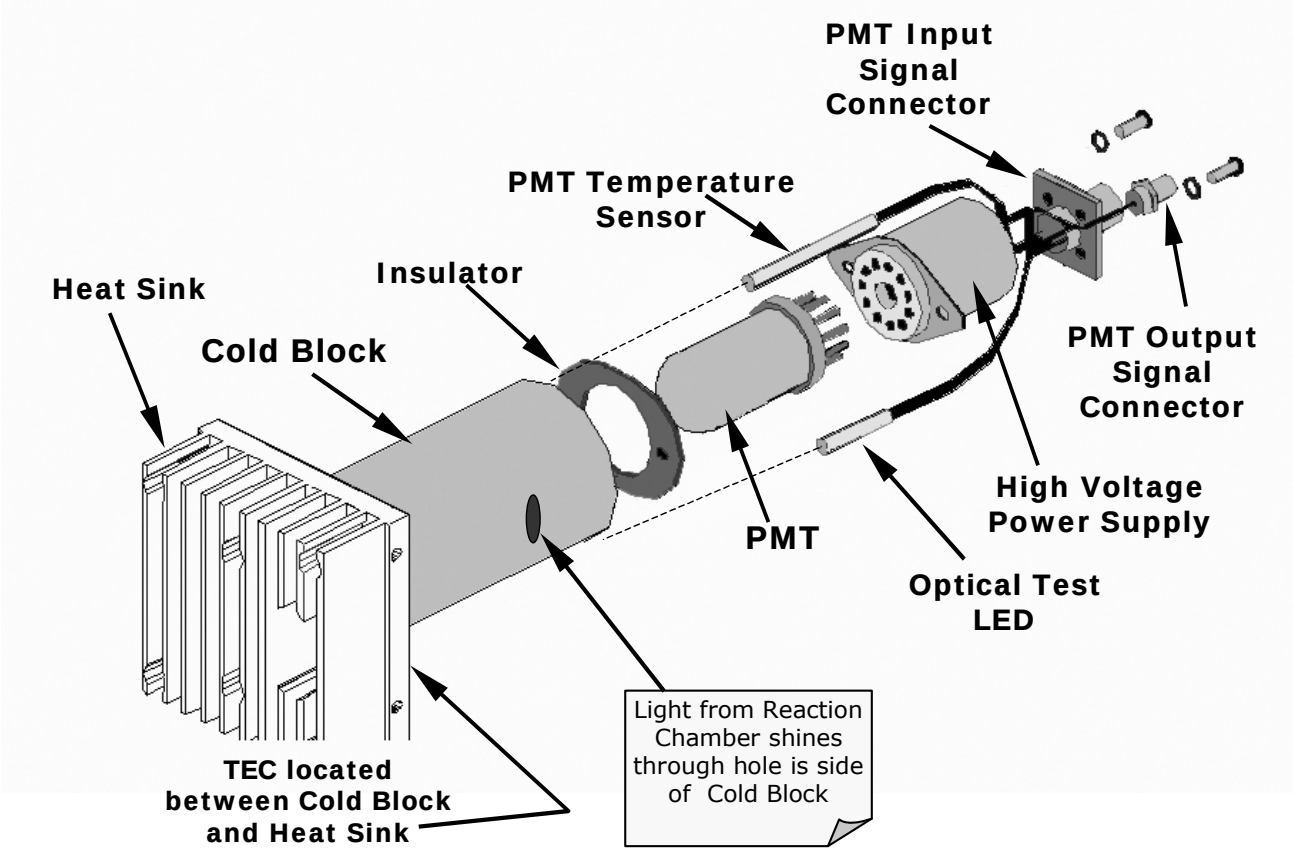

Figure 10-13. PMT Assembly

A typical PMT is a vacuum tube containing a variety of specially designed electrodes. Photons from the reaction are filtered by an optical high-pass filter, enter the PMT and strike a negatively charged photo cathode causing it to emit electrons. A high voltage potential across these focusing electrodes directs the electrons toward an array of high voltage dynodes. The dynodes in this electron multiplier array are designed so that each stage multiplies the number of emitted electrons by emitting multiple, new electrons. The greatly increased number of electrons emitted from one end of electron multiplier are collected by a positively charged anode at the other end, which creates a useable current signal. This current signal is amplified by the preamplifier board and then reported to the motherboard.

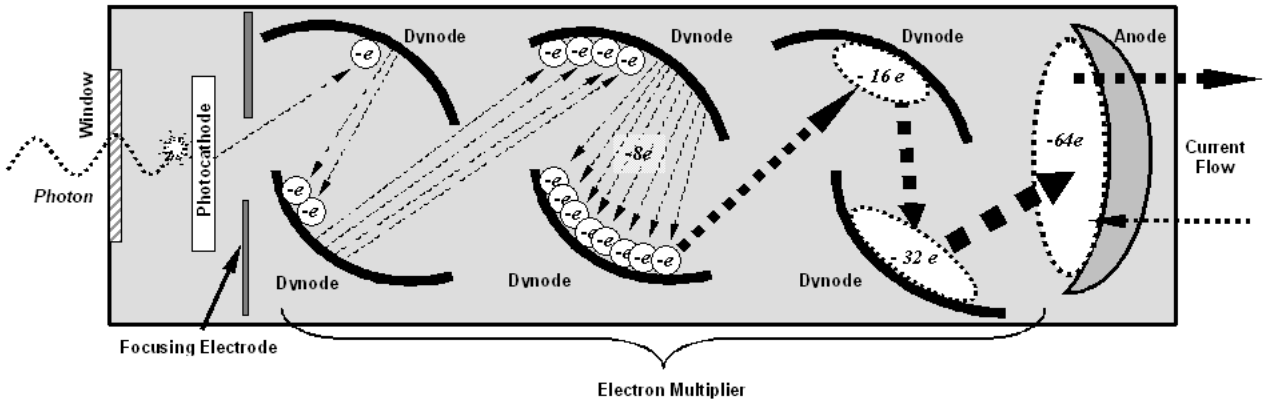

Figure 10-14. Basic PMT Design

A significant performance characteristic of the PMT is the voltage potential across the electron multiplier. The higher the voltage, the greater is the number of electrons emitted from each dynode of the electron multiplier, making the PMT more sensitive and responsive to small variations in light intensity but also more noisy (dark noise). The gain voltage of the PMT used in the T101 is usually set between 450 V and 800 V. This parameter is viewable through the front panel as test function **HVPS** (Section 4.2.1). For information on when and how to set this voltage, see Section 9.6.2.

The PMT is housed inside the PMT module assembly (Figure 10-13). This assembly also includes the high voltage power supply required to drive the PMT, an LED used by the instrument's optical test function, a thermistor that measures the temperature of the PMT and various components of the PMT cooling system including the thermo-electric cooler (TEC).

10.4.5. PMT COOLING SYSTEM

The performance of the analyzer's PMT is significantly affected by temperature. Variations in PMT temperature are directly reflected in the signal output of the PMT. The signal to noise ratio of the PMT output is radically influenced by temperature as well. The warmer The PMT is, the noisier its signal becomes until the noise renders the concentration signal useless. To alleviate this problem a special cooling system exists that maintains the PMT temperature at a stable, low level

10.4.5.1. Thermoelectric Cooler (TEC)

The core of the T101 PMT cooling system is a solid state heat pump called a thermoelectric cooler (TEC). Thermoelectric coolers transfer heat from a one side of a special set of semiconductor junctions to the other when a DC current is applied. The heat is pumped at a rate proportional to the amount of current applied. In the Model T101 the TEC is physically attached to a cold block that absorbs heat directly from the PMT and a heat sink that is cooled by moving air (see Figure 10-15). A Thermocouple embedded into the cold block generates an analog voltage corresponding to the current temperature of the PMT. The PMT Preamp PCA conditions and amplifies this signal then passes it on to the TEC Control PCA

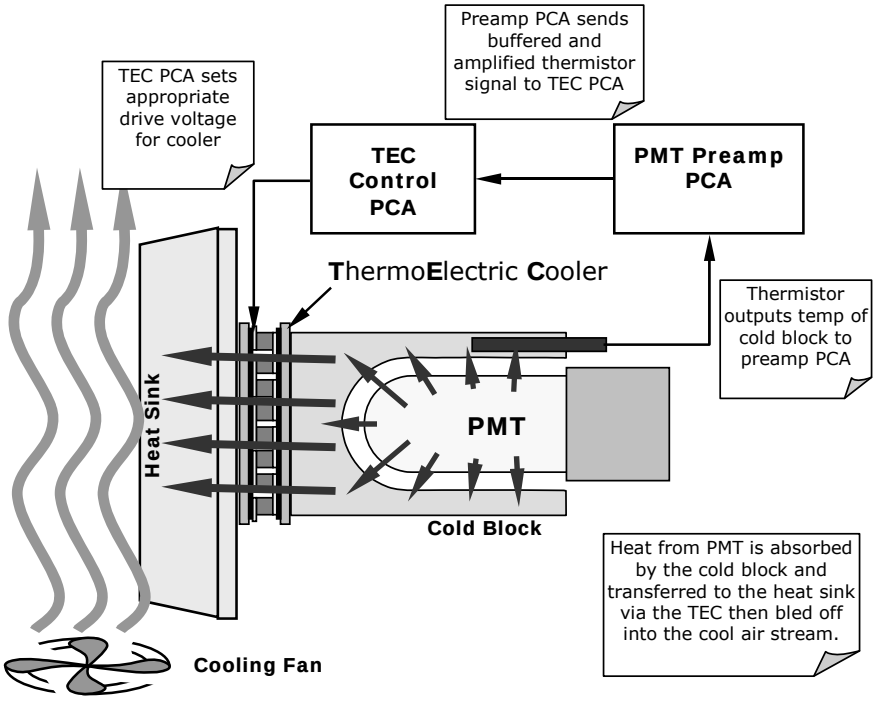

Figure 10-15. PMT Cooling System

10.4.5.2. TEC Control Board

The TEC control printed circuit assembly is located on the sensor housing assembly, under the slanted shroud, next to the cooling fins and directly above the cooling fan. Using the amplified PMT temperature signal from the PMT preamplifier board (Section 10.4.6); it sets the drive voltage for the thermoelectric cooler. The warmer the PMT gets, the more current is passed through the TEC causing it to pump more heat to the heat sink.

TEC Control Power Status LED

A red LED located on the top edge of this assembly glows constantly to indicate that the control circuit is receiving power.

TEC Control Test Points

Four test points are also located at the top of this assembly they are numbered left to right start with the point immediately to the right of the power status LED. See Section 9.5.3 for more information.

10.4.6. PMT PREAMPLIFIER

The PMT preamplifier board amplifies the PMT signal into a useable analog voltage **(PMT)** that can be processed by the motherboard into a digital signal to be used by the CPU to calculate the H_2S concentration of the gas in the sample chamber.

The output signal of the PMT is controlled by two different adjustments. First, the voltage across the electron multiplier array of the PMT is adjusted with a set of two hexadecimal switches. Adjusting this voltage directly affects the HVPS voltage and, hence, the signal from the PMT. Secondly, the gain of the amplified signal can further

be adjusted through a potentiometer. These adjustments should only be performed when encountering problems with the software calibration that cannot be rectified otherwise. See Section 9.6.4 for this hardware calibration.

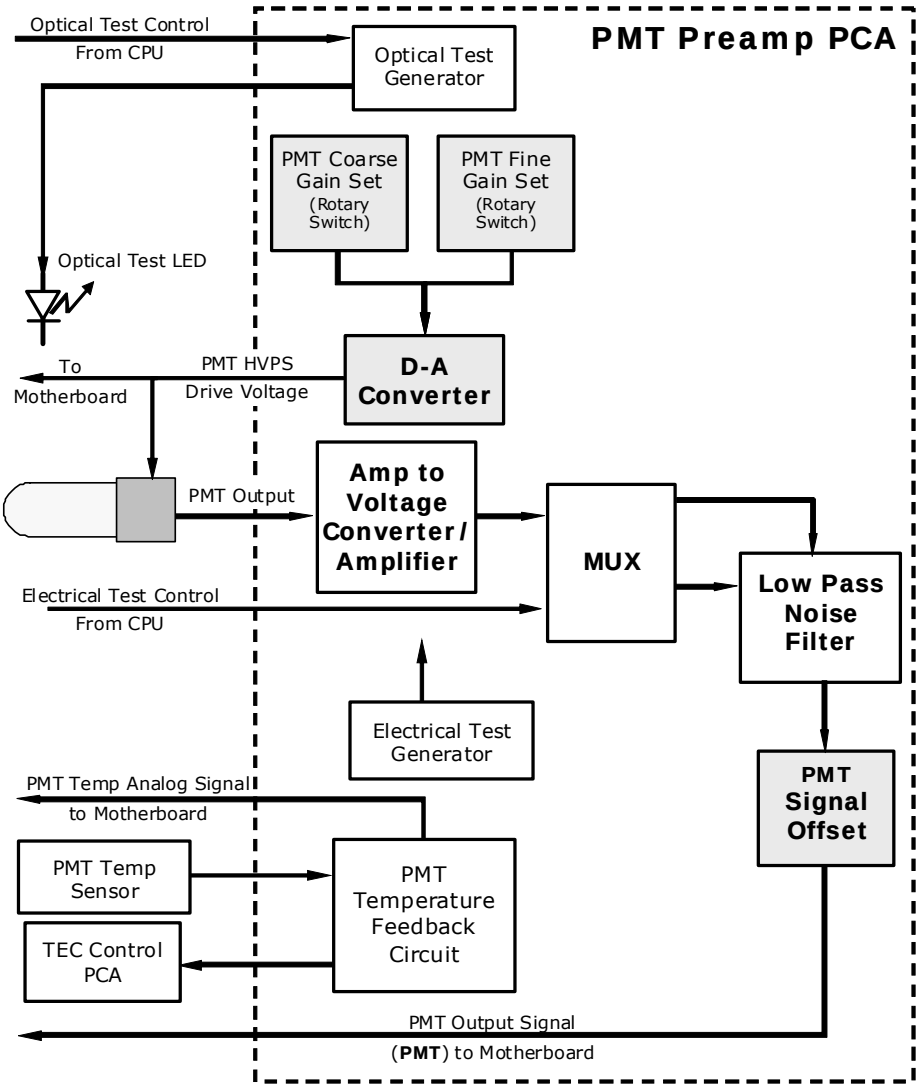

Figure 10-16. PMT Preamp Block Diagram

The PMT temperature control loop maintains the PMT temperature around 7° C and can be viewed as test function **PMT TEMP** on the front panel.

The electrical test (**ETEST**) circuit generates a constant, electronic signal intended to simulate the output of the PMT (after conversion from current to voltage). By bypassing the detector's actual signal, it is possible to test most of the signal handling and conditioning circuitry on the PMT preamplifier board. See Section 4.6.5 for instructions on performing this test.

The optical test (**OTEST**) feature causes an LED inside the PMT cold block to create a light signal that can be measured with the PMT. If zero air is supplied to the analyzer, the entire measurement capability of the sensor module can be tested including the PMT and the current to voltage conversion circuit on the PMT preamplifier board. See Section 4.6.4 for instructions on performing this test.

10.4.7. PNEUMATIC SENSOR BOARD

The flow and pressure sensors of the T101 are located on a printed circuit assembly just behind the PMT sensor. Refer to Section 9.5.15 on how to test this assembly. The signals of this board are supplied to the motherboard for further signal processing. All sensors are linearized in the firmware and can be span calibrated from the front panel. See Section 4.6.7 for instructions on performing this test.

10.4.8. RELAY BOARD

The relay board is the central switching unit of the analyzer. It contains power relays, status LEDs for all heated zones and valves as well as valve drivers, thermocouple amplifiers, power distribution connectors and the two switching power supplies of the analyzer. The relay board communicates with the motherboard over the I^2C bus and is the main board for trouble-shooting power problems of any kind.

10.4.8.1. Heater Control

The T101 uses a variety of heaters for its individual components. All heaters are AC powered and can be configured for 100/120 VAC or 220/230VAC at 50-60 Hz.

The two sample chamber heaters are electronically connected in parallel for analyzers at 100/120 VAC line power and in series for units configured for 220/230 VAC. One configuration plug on the relay board determines the power configuration for the entire analyzer.

On units with IZS options installed, an additional set of AC heaters is attached to the IZS permeation tube. Some special T101 models may have other, non-standard heating zones installed, such as a dilution manifold.

In order to operate efficiently, the $H_2S \rightarrow SO_2$ converter must be heated to 315˚C. An AC band heater wrapped around the converter cartridge contains two heater coils that are also configured in parallel or in series depending on the Type of AC power being supplied. A thermocouple imbedded in the heater measures the temperature and feeds a small voltage to the relay board's thermocouple amplifier, which, in turn, transmits the linearized analog voltage to the motherboard. This information is sent to the CPU via the instrument's I2C buss. The CPU returns activate/deactivate signals to the appropriate relay also via the I2C buss.

On units with IZS options installed, an additional set of AC heaters is attached to the IZS oven. Some special T101 models may have other, non-standard heating zones installed, such as a bypass manifold.

10.4.8.2. Valve Control

The relay board also hosts two valve driver chips, each of which can drive up four valves. In its basic configuration the Model T101 requires no special valves to operate. However, on units with either the zero/span valve or the IZS option installed The valves are. Manifold valves may also be present in certain special versions of the analyzer.

10.4.9. STATUS LEDS & WATCH DOG CIRCUITRY

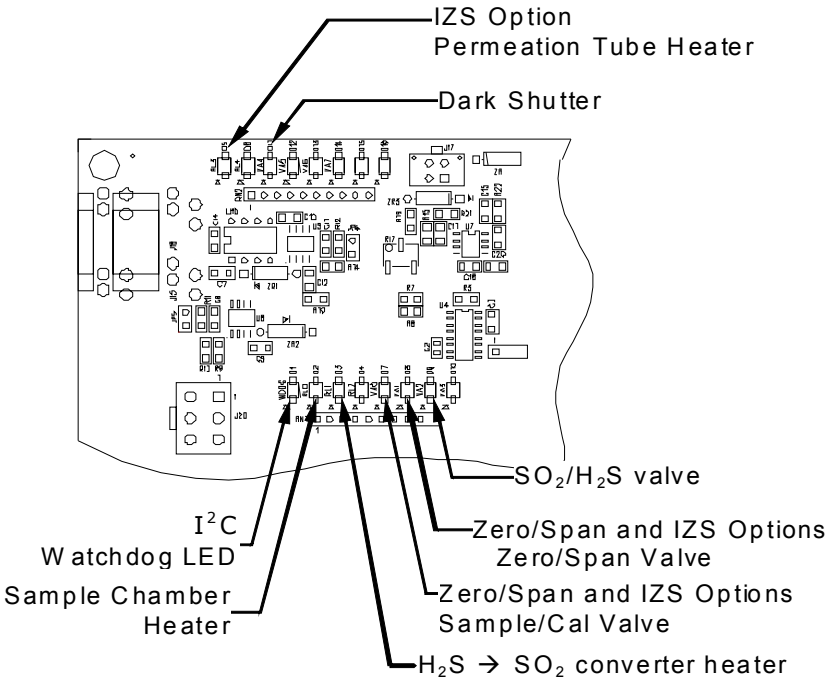

Figure 10-17. Relay Board Status LED Locations

Thirteen LEDs are located on the analyzer's relay board to indicate the status of the analyzer's heating zones and valves as well as a general operating watchdog indicator. Table 10-2 shows the states of these LEDs and their respective functionality.

Table 10-2. Relay Board Status LEDs

LED	COLOR	FUNCTION	STATUS WHEN LIT	STATUS WHEN UNLIT
D1	RED	Watchdog circuit	Cycles On/Off every 3 seconds under control of the CPU.	
D2	YELLOW	Sample chamber heater	HEATING	NOT HEATING
D3	YELLOW	$H_2S \rightarrow SO_2$ converter heater	HEATING	NOT HEATING
D4	YELLOW	Unused	N/A	N/A
D5	YELLOW	IZS heater Perm. Tube (option)	HEATING	NOT HEATING
D6	YELLOW	Unused	N/A	N/A
D7	GREEN	Sample/Cal Valve (option)	Valve open to zero/span valve.	Valve open to sample inlet
D8	GREEN	Zero/Span Valve (option)	Valve open to zero gas inlet	Valve open to span gas inlet
D9	GREEN	SO_2/H_2S valve	Gas stream bypasses $H_2S \rightarrow SO_2$ converter. Analyzer measuring SO_2	Valve open to $H_2S \rightarrow SO_2$ converter. Analyzer measuring H_2S.
D10	GREEN	Unused	N/A	N/A
D11	GREEN	UV Lamp Shutter	Shutter open	Shutter closed
D12-14	GREEN	Unused	N/A	N/A

As a Safety measure, special circuitry on the Relay Board watches the status of LED D1. Should this LED ever stay **ON** or **OFF** for 30 seconds, indicating that the CPU or I^2C bus has stopped functioning, the Watchdog Circuit will automatically shut of all valves as well as turn off the UV Source(s) and all heaters. The Sample Pump will still be running.

10.4.10. MOTHERBOARD

This printed circuit assembly provides a multitude of functions including A/D conversion, digital input/output, PC-104 to I^2C translation, temperature sensor signal processing and is a pass through for the RS-232 and RS-485 signals.

10.4.10.1. A to D Conversion

Analog signals, such as the voltages received from the analyzer's various sensors, are converted into digital signals that the CPU can understand and manipulate by the analog to digital converter (A/D).Under the control of the CPU, this functional block selects a particular signal input and then coverts the selected voltage into a digital word.

The A/D consists of a voltage-to-frequency (V-F) converter, a programmable logic device (PLD), three multiplexers, several amplifiers and some other associated devices. The V-F converter produces a frequency proportional to its input voltage. The PLD counts the output of the V-F during a specified time period, and sends the result of that count, in the form of a binary number, to the CPU.

The A/D can be configured for several different input modes and ranges but in the is used in uni-polar mode with a +5V full scale. The converter includes a 1% over and under-range. This allows signals from -0.05V to +5.05V to be fully converted.

For A to D calibration purposes, two reference voltages are supplied to the A/D converter: Reference ground and +4.096 VDC. During calibration the device measures these two voltages and outputs their digital equivalent to the CPU. The CPU uses these values to compute the A to D converter's offset and slope (not the same offset and slope recorded during zero/span calibration) and uses these factors for subsequent conversions. See 4.6.3.4 for instructions on performing this calibration.

10.4.10.2. Sensor Inputs

The key analog sensor signals are coupled to the A/D through the master multiplexer from two connectors on the motherboard. 100K terminating resistors on each of the inputs prevent cross talk from appearing on the sensor signals.

PMT Detector Output: This signal, output by the PMT preamp PCA, is used in the computation of the H_2S concentration displayed at the top right hand corner of the front panel display and output through the instrument's analog outputs and **COMM** ports.

PMT HIGH VOLTAGE POWER SUPPLY LEVEL: This input is based on the drive voltage output by the PMT pram board to the PMT's high voltage power supply (HVPS). It is digitized and sent to the CPU where it is used to calculate the voltage setting of the HVPS and stored in the instrument's memory as the test function **HVPS. HVPS** is viewable as a test function (Section 4.2.1) through the analyzer's front panel.

PMT TEMPERATURE: This signal is the output of the thermistor attached to the PMT cold block amplified by the PMT temperature feedback circuit on the PMT preamp

board. It is digitized and sent to the CPU where it is used to calculate the current temperature of the PMT.

This measurement is stored in the analyzer's memory as the test function **PMT TEMP** and is viewable as a test function (Section 4.2.1) through the analyzer's front panel.

SAMPLE GAS PRESSURE SENSOR: This sensor measures the gas pressure at the exit of the sample chamber.

SAMPLE FLOW SENSOR: This sensor measure the flow rate of the sample gas as it exits the sample chamber.

10.4.10.3. Thermistor Interface

This circuit provides excitation, termination and signal selection for several negative-coefficient, thermistor temperature sensors located inside the analyzer. They are:

SAMPLE CHAMBER TEMPERATURE SENSOR: The source of this signal is a thermistor embedded in the of the sample chamber block. It measures the temperature of the sample gas in the chamber. This data are used by the CPU to control sample chamber the heating circuit and as part of the H_2S, calculations when the instrument's Temperature/Pressure Compensation feature is enabled.

This measurement is stored in the analyzer memory as a parameter (**RCEL TEMP)** and is viewable as a test function under the same name (Section6.2.1) through the analyzer's front panel.

IZS OPTION PERMEATION TUBE TEMPERATURE SENSOR: This thermistor, attached to the permeation tube in the IZS option, reports the current temperature of that tube to the CPU as part of control loop that keeps the tube at a constant temperature.

BOX TEMPERATURE SENSOR: A thermistor is attached to the motherboard. It measures the analyzer's inside temperature. This information is stored by the CPU and can be viewed by the user for troubleshooting purposes through the front panel display. This measurement is stored in the analyzer. Memory as the test function **BOX TEMP** and is viewable as a test function (Section 4.2.1) through the analyzer's front panel.

10.4.11. ANALOG OUTPUTS

The analyzer comes equipped with four Analog Outputs: **A1**, **A2**, **A4** and a fourth that is a spare.

A1 and **A2** Outputs: The first two, **A1** and **A2** are normally set up to operate in parallel so that the same data can be sent to two different recording devices. While the names imply that one should be used for sending data to a chart recorder and the other for interfacing with a data logger, either can be used for both applications.

Both of these channels output a signal that is proportional to the **H_2S** concentration of the sample gas. The **A1** and **A2** outputs can be slaved together or set up to operated independently. A variety of scaling factors are available; see Section 4.4.4 for information on setting the reporting range type and scaling factors for these output channels

Test Output: The third analog output, labeled **A4** is special. It can be set by the user (see Section 4.6.9) to carry the current signal level of any one of the parameters accessible through the **TEST** menu of the unit's software.

In its standard configuration, the analyzer comes with all three of these channels set up to output a DC voltage. However, 4-20mA current loop drivers can be purchased for the first two of these outputs, **A1** and **A2**.

Output Loop-back: All three of the functioning analog outputs are connected back to the A/D converter through a Loop-back circuit. This permits the voltage outputs to be calibrated by the CPU without need for any additional tools or fixtures

10.4.12. EXTERNAL DIGITAL I/O

This External Digital I/O performs two functions.

STATUS OUTPUTS: Logic-Level voltages are output through an optically isolated 8-pin connector located on the rear panel of the analyzer. These outputs convey good/bad and on/off information about certain analyzer conditions. They can be used to interface with certain types of programmable devices (see Section 5.1.1.1).

CONTROL INPUTS: By applying +5VDC power supplied from an external source such as a PLC or Data logger (see Section 5.1.1.2), Zero and Span calibrations can be initiated by contact closures on the rear panel.

10.4.13. I^2C DATA BUS

I^2C is a two-wire, clocked, bi-directional, digital serial I/O bus that is used widely in commercial and consumer electronic systems. A transceiver on the Motherboard converts data and control signals from the PC-104 bus to I^2C. The data is then fed to the relay board and optional analog input circuitry.

10.4.14. POWER UP CIRCUIT

This circuit monitors the +5V power supply during start-up and sets the analog outputs, external digital I/O ports, and I^2C circuitry to specific values until the CPU boots and the instrument software can establish control.

10.5. POWER SUPPLY/ CIRCUIT BREAKER

The analyzer operates on 100 VAC, 115 VAC or 230 VAC power at either 50Hz or 60Hz. Individual units are set up at the factory to accept any combination of these five attributes. As illustrated in Figure 10-18 below, power enters the analyzer through a standard IEC 320 power receptacle located on the rear panel of the instrument. From there it is routed through the ON/OFF switch located in the lower right corner of the front panel.

AC line power is converted stepped down and converted to DC power by two DC power supplies. One supplies +12 VDC, for various valves and valve options, while a second supply provides +5 VDC and ±15 VDC for logic and analog circuitry as well as the TEC cooler. All AC and DC Voltages are distributed through the Relay Board.

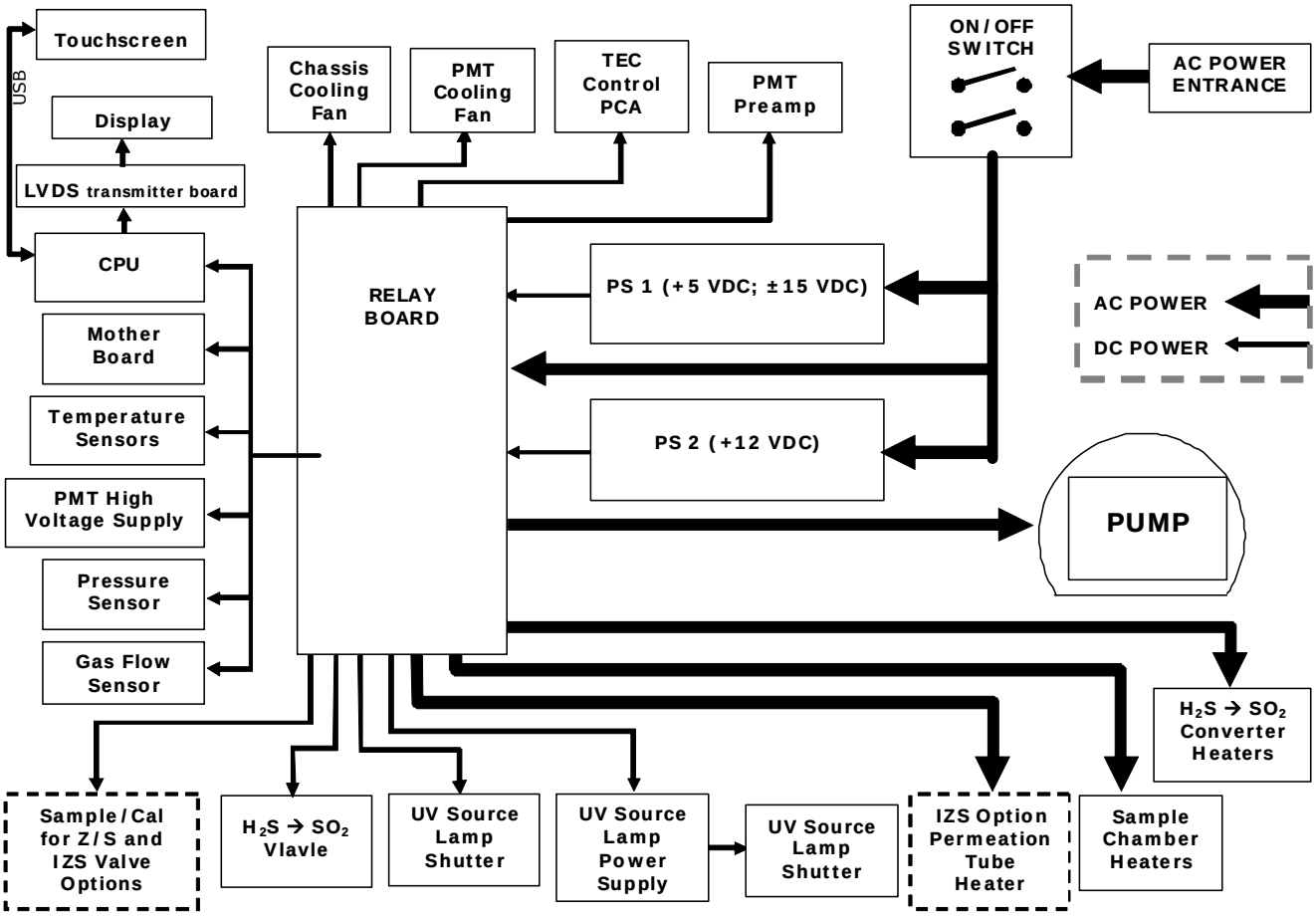

Figure 10-18. Power Distribution Block Diagram

A 6.75 ampere circuit breaker is built into the ON/OFF switch. In case of a wiring fault or incorrect supply power, the circuit breaker will automatically turn off the analyzer.

CAUTION

Should the power circuit breaker trip, correct the condition causing this situation before turning the analyzer back on.

10.6. FRONT PANEL/DISPLAY INTERFACE

Users can input data and receive information directly through the front panel touch-screen display. The LCD display is controlled directly by the CPU board. The touchscreen is interfaced to the CPU by means of a touchscreen controller that connects to the CPU via the internal USB bus and emulates a computer mouse.

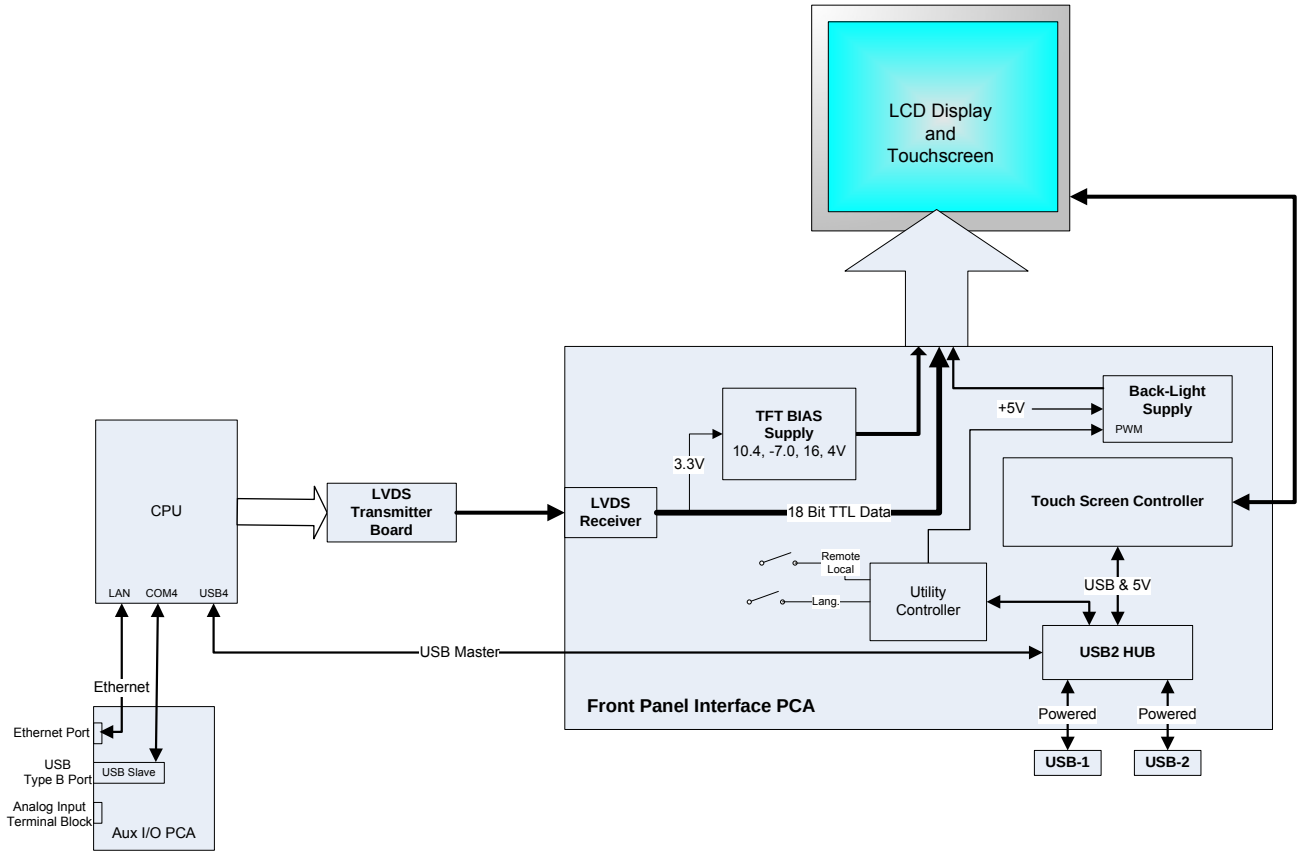

Figure 10-19. Front Panel and Display Interface Block Diagram

10.6.1. LVDS TRANSMITTER BOARD

The LVDS (low voltage differential signaling) transmitter board converts the parallel display bus to a serialized, low voltage, differential signal bus in order to transmit the video signal to the LCD interface PCA.

10.6.2. FRONT PANEL INTERFACE PCA

The front panel interface PCA controls the various functions of the display and touchscreen. For driving the display it provides connection between the CPU video controller and the LCD display module. This PCA also contains:

- power supply circuitry for the LCD display module
- a USB hub that is used for communications with the touchscreen controller and the two front panel USB device ports
- the circuitry for powering the display backlight

10.7. SOFTWARE OPERATION

The T101 H_2S analyzer is at its heart a high performance, 386-based microcomputer running MS-DOS. Inside the DOS shell, special software developed by Teledyne API interprets user commands via the various interfaces, performs procedures and tasks, stores data in the CPU's various memory devices and calculates the concentration of the sample gas.

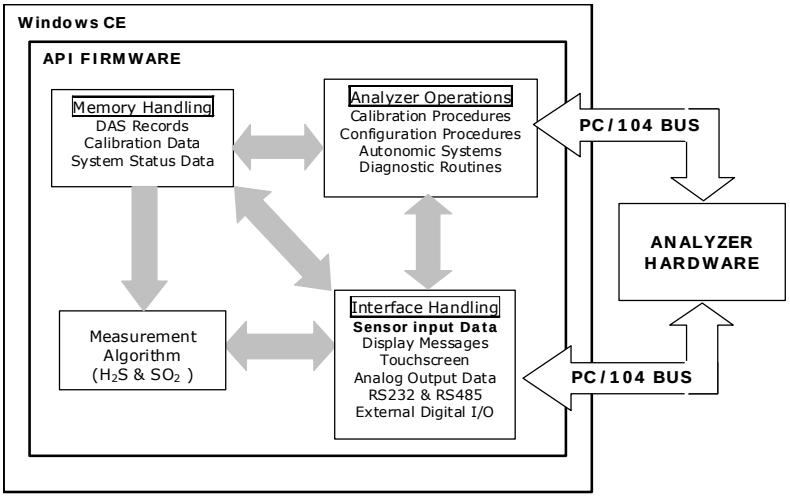

Figure 10-20. Basic Software Operation

10.7.1. ADAPTIVE FILTER

The T101 H_2S analyzer software processes sample gas measurement and reference data through a built-in adaptive filter built into the software. Unlike other analyzers that average the sensor output signal over a fixed time period, the T101 calculates averages over a set number of samples. During operation, the software automatically switches between two filters of different lengths based on the conditions at hand.

During conditions of constant or nearly constant concentration the software computes an average of the last 240 samples. This provides the calculation portion of the software with smooth stable readings. If a rapid change in concentration is detected, the adaptive filter switches modes and only averages the last 48 samples. This allows the analyzer to respond to the rapidly changing concentration more quickly. Once triggered, the short filter remains engaged for a fixed time period to prevent chattering.

Two conditions must be simultaneously met to switch to the short filter. First the instantaneous concentration must exceed the average in the long filter by a fixed amount. Second, the instantaneous concentration must exceed the average in the long filter by a portion, or percentage, of the average in the long filter.

If necessary, the filter lengths of these two modes may be changed to any value between 1 and 1000 samples. Long sample lengths provide better signal to noise rejection, but poor response times. Conversely shorter filter lengths result in poor signal to noise rejection, but quicker response times.

10.7.2. CALIBRATION - SLOPE AND OFFSET

Calibration of the analyzer is performed exclusively in software. During instrument calibration (Chapters 6 and 7) the user enters expected values for zero and span through the front panel keypad and commands the instrument to make readings of sample gases with know concentrations of H_2S. The readings taken are adjusted, linearized, and compared to the expected values as input. With this information the software computes values for instrument both slope and offset and stores these values in memory for use in calculating the H_2S concentration of the sample gas.

Instrument slope and offset values recorded during the last calibration can be viewed by pressing the following keystroke sequence

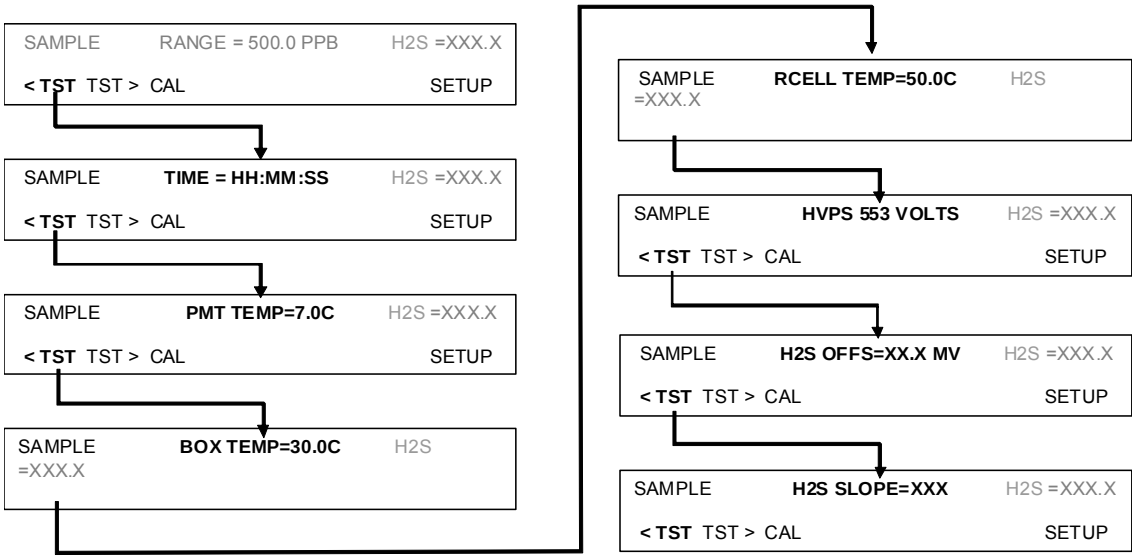

NOTE

Separate slope and offset values are calculated and recorded for H_2S and SO_2 gas measurements. Here they are shown as they appear when analyzer is in H2S Mode. In SO2 Mode they appear as SO2 OFFS & SO2 SLOPE. In multigas mode, both versions appear.

10.7.3. TEMPERATURE AND PRESSURE COMPENSATION (TPC) FEATURE

As explained previously, changes in temperature can significantly affect the amount of fluoresced UV light generated in the instrument's sample chamber. To negate this effect the Model T101 maintains the sample gas at a stable, raised temperature.

Pressure changes can also have a noticeable, if more subtle, effect on the H_2S concentration calculation. To account for this, the Model T101 software includes a feature which allows the instrument to include a compensation factor in the H_2S calculations that is based on changes in ambient pressure.

When the TPC feature is enabled, the analyzer's H_2S concentration is divided by a factor called **PRESSCO** which is based on the ratio between the ambient pressure of the sample gas and standard atmospheric pressure (Equation 10-5). As ambient pressure increases, the compensated H_2S concentration is decreased.

$$PRESSCO = \frac{SAMPLE\_PRESSURE\ (" HG - A) \times SAMP\_PRESS\_SLOPE}{29.92\ (" HG - A)}$$

Equation 10-5

SAMPLE-PRESSURE: The ambient pressure of the sample gas as measured by the instrument's sample pressure sensor (see Figure 10-7) in "Hg-A.

SAMP_PRESS_SLOPE: Sample pressure slope correction factor.

Section 4.5 describes the method for enabling/disabling the TPC feature.

10.7.4. INTERNAL DATA ACQUISITION SYSTEM (DAS)

The DAS is designed to implement predictive diagnostics that stores trending data for users to anticipate when an instrument will require service. Large amounts of data can be stored in non-volatile memory and retrieved in plain text format for further processing with common data analysis programs. The DAS has a consistent user interface in all Teledyne API instruments. New data parameters and triggering events can be added to the instrument as needed.

Depending on the sampling frequency and the number of data parameters the DAS can store several months of data, which are retained even when the instrument is powered off or a new firmware is installed. The DAS permits users to access the data through the instrument's front panel or the remote interface. The latter can automatically download stored data for further processing. For information on using the DAS, refer to Section 4.8.

11. A PRIMER ON ELECTRO-STATIC DISCHARGE

Teledyne API considers the prevention of damage caused by the discharge of static electricity to be extremely important part of making sure that your analyzer continues to provide reliable service for a long time. This section describes how static electricity occurs, why it is so dangerous to electronic components and assemblies as well as how to prevent that damage from occurring.

11.1. HOW STATIC CHARGES ARE CREATED

Modern electronic devices such as the types used in the various electronic assemblies of your analyzer, are very small, require very little power and operate very quickly. Unfortunately, the same characteristics that allow them to do these things also make them very susceptible to damage from the discharge of static electricity. Controlling electrostatic discharge begins with understanding how electro-static charges occur in the first place.

Static electricity is the result of something called triboelectric charging which happens whenever the atoms of the surface layers of two materials rub against each other. As the atoms of the two surfaces move together and separate, some electrons from one surface are retained by the other.

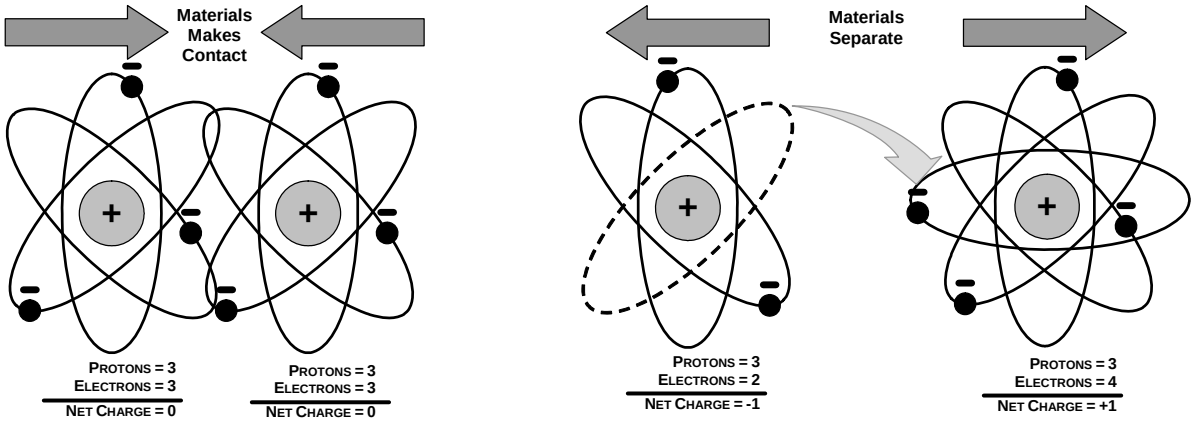

Figure 11-1. Triboelectric Charging

If one of the surfaces is a poor conductor or even a good conductor that is not grounded, the resulting positive or negative charge cannot bleed off and becomes trapped in place, or static. The most common example of triboelectric charging happens when someone wearing leather or rubber soled shoes walks across a nylon carpet or linoleum tiled floor. With each step, electrons change places and the resulting electro-static charge builds up, quickly reaching significant levels. Pushing an epoxy printed circuit board across a

workbench, using a plastic handled screwdriver or even the constant jostling of Styrofoam ™ pellets during shipment can also build hefty static charges

Table 11-1. Static Generation Voltages for Typical Activities

MEANS OF GENERATION	65-90% RH	10-25% RH
Walking across nylon carpet	1,500V	35,000V
Walking across vinyl tile	250V	12,000V
Worker at bench	100V	6,000V
Poly bag picked up from bench	1,200V	20,000V
Moving around in a chair padded with urethane foam	1,500V	18,000V

11.2. HOW ELECTRO-STATIC CHARGES CAUSE DAMAGE

Damage to components occurs when these static charges come into contact with an electronic device. Current flows as the charge moves along the conductive circuitry of the device and the typically very high voltage levels of the charge overheat the delicate traces of the integrated circuits, melting them or even vaporizing parts of them. When examined by microscope the damage caused by electro-static discharge looks a lot like tiny bomb craters littered across the landscape of the component's circuitry.

A quick comparison of the values in Table 11-1 with the those shown in the Table 11-2, listing device susceptibility levels, shows why *Semiconductor Reliability News* estimates that approximately 60% of device failures are the result of damage due to electro-static discharge.

Table 11-2. Sensitivity of Electronic Devices to Damage by ESD

DEVICE	DAMAGE SUSCEPTIBILITY VOLTAGE RANGE	
	DAMAGE BEGINS OCCURRING AT	CATASTROPHIC DAMAGE AT
MOSFET	10	100
VMOS	30	1800
NMOS	60	100
GaAsFET	60	2000
EPROM	100	100
JFET	140	7000
SAW	150	500
Op-AMP	190	2500
CMOS	200	3000
Schottky Diodes	300	2500
Film Resistors	300	3000
This Film Resistors	300	7000
ECL	500	500
SCR	500	1000
Schottky TTL	500	2500

Potentially damaging electro-static discharges can occur:

- Any time a charged surface (including the human body) discharges to a device. Even simple contact of a finger to the leads of a sensitive device or assembly can allow enough discharge to cause damage. A similar discharge can occur from a charged conductive object, such as a metallic tool or fixture.
- When static charges accumulated on a sensitive device discharges from the device to another surface such as packaging materials, work surfaces, machine surfaces or other device. In some cases, charged device discharges can be the most destructive.

A typical example of this is the simple act of installing an electronic assembly into the connector or wiring harness of the equipment in which it is to function. If the assembly is carrying a static charge, as it is connected to ground a discharge will occur.

- Whenever a sensitive device is moved into the field of an existing electro-static field, a charge may be induced on the device in effect discharging the field onto the device. If the device is then momentarily grounded while within the electrostatic field or removed from the region of the electrostatic field and grounded somewhere else, a second discharge will occur as the charge is transferred from the device to ground.

11.3. COMMON MYTHS ABOUT ESD DAMAGE

- **I didn't feel a shock so there was no electro-static discharge**: The human nervous system isn't able to feel a static discharge of less than 3500 volts. Most devices are damaged by discharge levels much lower than that.
- **I didn't touch it so there was no electro-static discharge**: Electro-static charges are fields whose lines of force can extend several inches or sometimes even feet away from the surface bearing the charge.
- **It still works so there was no damage**: Sometimes the damaged caused by electro-static discharge can completely sever a circuit trace causing the device to fail immediately. More likely, the trace will be only partially occluded by the damage causing degraded performance of the device or worse, weakening the trace. This weakened circuit may seem to function fine for a short time, but even the very low voltage and current levels of the device's normal operating levels will eat away at the defect over time causing the device to fail well before its designed lifetime is reached.

  These latent failures are often the most costly since the failure of the equipment in which the damaged device is installed causes down time, lost data, lost productivity, as well as possible failure and damage to other pieces of equipment or property.

- **Static Charges can't build up on a conductive surface:** There are two errors in this statement:

  Conductive devices can build static charges if they are not grounded. The charge will be equalized across the entire device, but without access to earth ground, they are still trapped and can still build to high enough levels to cause damage when they are discharged.

  A charge can be induced onto the conductive surface and/or discharge triggered in the presence of a charged field such as a large static charge clinging to the surface of a nylon jacket of someone walking up to a workbench.

- **As long as my analyzer is properly installed, it is safe from damage caused by static discharges**: It is true that when properly installed the chassis ground of your analyzer is tied to earth ground and its electronic components are prevented from building static electric charges themselves. This does not prevent discharges from static fields built up on other things, like you and your clothing, from discharging through the instrument and damaging it.

11.4. BASIC PRINCIPLES OF STATIC CONTROL

It is impossible to stop the creation of instantaneous static electric charges. It is not, however difficult to prevent those charges from building to dangerous levels or prevent damage due to electro-static discharge from occurring.

11.4.1. GENERAL RULES

Only handle or work on all electronic assemblies at a properly set up ESD station. Setting up an ESD safe workstation need not be complicated. A protective mat properly tied to ground and a wrist strap are all that is needed to create a basic anti-ESD workstation (see figure 11-2).

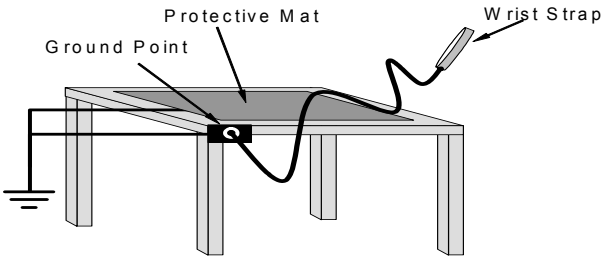

Figure 11-2. Basic anti-ESD Work Station

For technicians that work in the field, special lightweight and portable anti-ESD kits are available from most suppliers of ESD protection gear. These include everything needed to create a temporary anti-ESD work area anywhere.

- **Always wear an Anti-ESD wrist strap when working on the electronic assemblies of your analyzer**. An anti-ESD wrist strap keeps the person wearing it at or near the same potential as other grounded objects in the work area and allows static charges to dissipate before they can build to dangerous levels. Anti-ESD wrist straps terminated with alligator clips are available for use in work areas where there is no available grounded plug.

Also, anti-ESD wrist straps include a current limiting resistor (usually around one meg-ohm) that protects you should you accidentally short yourself to the instrument's power supply.

- **Simply touching a grounded piece of metal is insufficient**. While this may temporarily bleed off static charges present at the time, once you stop touching the grounded metal new static charges will immediately begin to re-build. In some conditions, a charge large enough to damage a component can rebuild in just a few seconds.

- **Always store sensitive components and assemblies in anti-ESD storage bags or bins:** Even when you are not working on them, store all devices and assemblies in a closed anti-Static bag or bin. This will prevent induced charges from building up on the device or assembly and nearby static fields from discharging through it.
- **Use metallic anti-ESD bags for storing and shipping ESD sensitive components and assemblies rather than pink-poly bags.** The famous, "pink-poly" bags are made of a plastic that is impregnated with a liquid (similar to liquid laundry detergent) which very slowly sweats onto the surface of the plastic creating a slightly conductive layer over the surface of the bag.

While this layer may equalizes any charges that occur across the whole bag, it does not prevent the build up of static charges. If laying on a conductive, grounded surface, these bags will allow charges to bleed away but the very charges that build up on the surface of the bag itself can be transferred through the bag by induction onto the circuits of your ESD sensitive device. Also, the liquid impregnating the plastic is eventually used up after which the bag is as useless for preventing damage from ESD as any ordinary plastic bag.

Anti-Static bags made of plastic impregnated with metal (usually silvery in color) provide all of the charge equalizing abilities of the pink-poly bags but also, when properly sealed, create a Faraday cage that completely isolates the contents from discharges and the inductive transfer of static charges.

Storage bins made of plastic impregnated with carbon (usually black in color) are also excellent at dissipating static charges and isolating their contents from field effects and discharges.

- **Never use ordinary plastic adhesive tape near an ESD sensitive device or to close an anti-ESD bag.** The act of pulling a piece of standard plastic adhesive tape, such as Scotch® tape, from its roll will generate a static charge of several thousand or even tens of thousands of volts on the tape itself and an associated field effect that can discharge through or be induced upon items up to a foot away.

11.4.2. BASIC ANTI-ESD PROCEDURES FOR ANALYZER REPAIR AND MAINTENANCE

11.4.2.1. Working at the Instrument Rack

When working on the analyzer while it is in the instrument rack and plugged into a properly grounded power supply.

1. Attach your anti-ESD wrist strap to ground before doing anything else.

- Use a wrist strap terminated with an alligator clip and attach it to a bare metal portion of the instrument chassis. This will safely connect you to the same ground level to which the instrument and all of its components are connected.

2. Pause for a second or two to allow any static charges to bleed away.
3. Open the casing of the analyzer and begin work. Up to this point, the closed metal casing of your analyzer has isolated the components and assemblies inside from any conducted or induced static charges.
4. If you must remove a component from the instrument, do not lay it down on a non-ESD preventative surface where static charges may lie in wait.
5. Only disconnect your wrist strap after you have finished work and closed the case of the analyzer.

11.4.2.2. Working at an Anti-ESD Work Bench.

When working on an instrument of an electronic assembly while it is resting on an anti-ESD work bench:

1. Plug your anti-ESD wrist strap into the grounded receptacle of the work station before touching any items on the work station and while standing at least a foot or so away. This will allow any charges you are carrying to bleed away through the ground connection of the workstation and prevent discharges due to field effects and induction from occurring.
2. Pause for a second or two to allow any static charges to bleed away.
3. Only open any anti-ESD storage bins or bags containing sensitive devices or assemblies after you have plugged your wrist strap into the workstation.
    - Lay the bag or bin on the workbench surface.
    - Before opening the container, wait several seconds for any static charges on the outside surface of the container to be bled away by the workstation's grounded protective mat.
4. Do not pick up tools that may be carrying static charges while also touching or holding an ESD Sensitive Device.
    - Only lay tools or ESD-sensitive devices and assemblies on the conductive surface of your workstation. Never lay them down on any non-ESD preventative surface.
5. Place any static sensitive devices or assemblies in anti-static storage bags or bins and close the bag or bin before unplugging your wrist strap.

6. Disconnecting your wrist strap is always the last action taken before leaving the workbench.

11.4.2.3. Transferring Components from Rack to Bench and Back

When transferring a sensitive device from an installed Teledyne API analyzer to an Anti-ESD workbench or back:

1. Follow the instructions listed above for working at the instrument rack and workstation.
2. Never carry the component or assembly without placing it in an anti-ESD bag or bin.
3. Before using the bag or container allow any surface charges on it to dissipate:
   - If you are at the instrument rack, hold the bag in one hand while your wrist strap is connected to a ground point.
   - If you are at an anti-ESD workbench, lay the container down on the conductive work surface.
   - In either case wait several seconds.
4. Place the item in the container.
5. Seal the container. If using a bag, fold the end over and fastening it with anti-ESD tape.
   - Folding the open end over isolates the component(s) inside from the effects of static fields.
   - Leaving the bag open or simply stapling it shut without folding it closed prevents the bag from forming a complete protective envelope around the device.
6. Once you have arrived at your destination, allow any surface charges that may have built up on the bag or bin during travel to dissipate:
   - Connect your wrist strap to ground.
   - If you are at the instrument rack, hold the bag in one hand while your wrist strap is connected to a ground point.
   - If you are at a anti-ESD work bench, lay the container down on the conductive work surface
   - In either case wait several seconds
7. Open the container.

11.4.2.4. Opening Shipments from Teledyne API

Packing materials such as bubble pack and Styrofoam pellets are extremely efficient generators of static electric charges. To prevent damage from ESD, Teledyne API ships all electronic components and assemblies in properly sealed anti-ESD containers.

Static charges will build up on the outer surface of the anti-ESD container during shipping as the packing materials vibrate and rub against each other. To prevent these

static charges from damaging the components or assemblies being shipped make sure that you always unpack shipments from Teledyne API by:

1. Opening the outer shipping box away from the anti-ESD work area.
2. Carry the still sealed ant-ESD bag, tube or bin to the anti-ESD work area.
3. Follow steps 6 and 7 of Section 11.4.2.4 above when opening the anti-ESD container at the work station.
4. Reserve the anti-ESD container or bag to use when packing electronic components or assemblies to be returned to Teledyne API.

11.4.2.5. Packing Components for Return to Teledyne API

Always pack electronic components and assemblies to be sent to Teledyne API Technical Support in anti-ESD bins, tubes or bags.

WARNING

- **DO NOT use pink-poly bags.**
- **NEVER allow any standard plastic packaging materials to touch the electronic component / assembly directly.**
  - **This includes, but is not limited to, plastic bubble-pack, Styrofoam peanuts, open cell foam, closed cell foam, and adhesive tape.**
- **DO NOT use standard adhesive tape as a sealer. Use ONLY anti-ESD tape.**

1. Never carry the component or assembly without placing it in an anti-ESD bag or bin.
2. Before using the bag or container allow any surface charges on it to dissipate:
   - If you are at the instrument rack, hold the bag in one hand while your wrist strap is connected to a ground point.
   - If you are at an anti-ESD workbench, lay the container down on the conductive work surface.
   - In either case wait several seconds.
3. Place the item in the container.
4. Seal the container. If using a bag, fold the end over and fastening it with anti-ESD tape.
   - Folding the open end over isolates the component(s) inside from the effects of static fields.
   - Leaving the bag open or simply stapling it shut without folding it closed prevents the bag from forming a complete protective envelope around the device.

NOTE

If you do not already have an adequate supply of anti-ESD bags or containers available, Teledyne API's Technical Support department will supply them. Follow the instructions listed above for working at the instrument rack and workstation.

GLOSSARY

Note: Some terms in this glossary may not occur elsewhere in this manual.

Term	Description/Definition
10BaseT	an Ethernet standard that uses twisted ("T") pairs of copper wires to transmit at 10 megabits per second (Mbps)
100BaseT	same as 10BaseT except ten times faster (100 Mbps)
APICOM	name of a remote control program offered by Teledyne-API to its customers
ASSY	*Assembly*
CAS	*Code-Activated Switch*
CD	*Corona Discharge*, a frequently luminous discharge, at the surface of a conductor or between two conductors of the same transmission line, accompanied by ionization of the surrounding atmosphere and often by a power loss
CE	*Converter Efficiency*, the percentage of light energy that is actually converted into electricity
CEM	*Continuous Emission Monitoring*
Chemical formulas that may be included in this document:	
CO_2	carbon dioxide
C_3H_8	propane
CH_4	methane
H_2O	water vapor
HC	general abbreviation for hydrocarbon
HNO_3	nitric acid
H_2S	hydrogen sulfide
NO	nitric oxide
NO_2	nitrogen dioxide
NO_X	nitrogen oxides, here defined as the sum of NO and NO_2
NO_y	nitrogen oxides, often called odd nitrogen: the sum of NO_X plus other compounds such as HNO_3 (definitions vary widely and may include nitrate (NO_3), PAN, N_2O and other compounds as well)
NH_3	ammonia

Term	Description/Definition
O_2	molecular oxygen
O_3	ozone
SO_2	sulfur dioxide
cm^3	metric abbreviation for *cubic centimeter* (replaces the obsolete abbreviation "cc")
CPU	*Central Processing Unit*
DAC	*Digital-to-Analog Converter*
DAS	*Data Acquisition System*
DCE	*Data Communication Equipment*
DFU	*Dry Filter Unit*
DHCP	*Dynamic Host Configuration Protocol.* A protocol used by LAN or Internet servers to automatically set up the interface protocols between themselves and any other addressable device connected to the network
DIAG	*Diagnostics*, the diagnostic settings of the analyzer.
DOM	*Disk On Module*, a 44-pin IDE flash drive with up to 128MB storage capacity for instrument's firmware, configuration settings and data
DOS	*Disk Operating System*
DRAM	*Dynamic Random Access Memory*
DR-DOS	*Digital Research DOS*
DTE	*Data Terminal Equipment*
EEPROM	*Electrically Erasable Programmable Read-Only Memory* also referred to as a FLASH chip or drive
ESD	*Electro-Static Discharge*
ETEST	*Electrical Test*
Ethernet	a standardized (IEEE 802.3) computer networking technology for local area networks (LANs), facilitating communication and sharing resources
FEP	*Fluorinated Ethylene Propylene* polymer, one of the polymers that Du Pont markets as *Teflon®*
Flash	non-volatile, solid-state memory

Term	Description/Definition
FPI	*Fabry-Perot Interface*: a special light filter typically made of a transparent plate with two reflecting surfaces or two parallel, highly reflective mirrors
GFC	*Gas Filter Correlation*
I^2C bus	a clocked, bi-directional, serial bus for communication between individual analyzer components
IC	*Integrated Circuit*, a modern, semi-conductor circuit that can contain many basic components such as resistors, transistors, capacitors etc in a miniaturized package used in electronic assemblies
IP	*Internet Protocol*
IZS	*Internal Zero Span*
LAN	*Local Area Network*
LCD	*Liquid Crystal Display*
LED	*Light Emitting Diode*
LPM	*Liters Per Minute*
MFC	*Mass Flow Controller*
M/R	*Measure/Reference*
MOLAR MASS	the mass, expressed in grams, of 1 mole of a specific substance. Conversely, one mole is the amount of the substance needed for the molar mass to be the same number in grams as the atomic mass of that substance. EXAMPLE: The atomic weight of Carbon is 12 therefore the molar mass of Carbon is 12 grams. Conversely, one mole of carbon equals the amount of carbon atoms that weighs 12 grams. Atomic weights can be found on any Periodic Table of Elements.
NDIR	*Non-Dispersive Infrared*
NIST-SRM	*National Institute of Standards and Technology - Standard Reference Material*
PC	*Personal Computer*
PCA	P*rinted Circuit Assembly*, the PCB with electronic components, ready to use
PC/AT	*Personal Computer / Advanced Technology*
PCB	*Printed Circuit Board*, the bare board without electronic component

Term	Description/Definition
PFA	*Per-Fluoro-Alkoxy*, an inert polymer; one of the polymers that *Du Pont* markets as *Teflon*®
PLC	*Programmable Logic Controller*, a device that is used to control instruments based on a logic level signal coming from the analyzer
PLD	*Programmable Logic Device*
PLL	*Phase Lock Loop*
PMT	*Photo Multiplier Tube*, a vacuum tube of electrodes that multiply electrons collected and charged to create a detectable current signal
P/N (or PN)	*Part Number*
PSD	*Prevention of Significant Deterioration*
PTFE	*Poly-Tetra-Fluoro-Ethylene*, a very inert polymer material used to handle gases that may react on other surfaces; one of the polymers that *Du Pont* markets as *Teflon*®
PVC	*Poly Vinyl Chloride*, a polymer used for downstream tubing
Rdg	Reading
RS-232	specification and standard describing a serial communication method between DTE (Data Terminal Equipment) and DCE (Data Circuit-terminating Equipment) devices, using a maximum cable-length of 50 feet
RS-485	specification and standard describing a binary serial communication method among multiple devices at a data rate faster than RS-232 with a much longer distance between the host and the furthest device
SAROAD	*Storage and Retrieval of Aerometric Data*
SLAMS	*State and Local Air Monitoring Network Plan*
SLPM	*Standard Liters Per Minute* of a gas at standard temperature and pressure
STP	*Standard Temperature and Pressure*
TCP/IP	*Transfer Control Protocol / Internet Protocol*, the standard communications protocol for Ethernet devices
TEC	*Thermal Electric Cooler*
TPC	*Temperature/Pressure Compensation*
USB	*Universal Serial Bus*: a standard connection method to establish communication between peripheral devices and a host controller, such as a mouse and/or keyboard and a personal computer or laptop
VARS	*Variables*, the variable settings of the instrument
V-F	*Voltage-to-Frequency*
Z/S	*Zero / Span*

APPENDIX A - Version Specific Software Documentation

APPENDIX A-1: Software Menu Trees, S/W Version C.7 (E-Series), 1.0.5 (T-Series) 3

APPENDIX A-2: Setup Variables For Serial I/O, S/W Version C.7 (E-Series), 1.0.5 (T-Series) 11

APPENDIX A-3: Warnings and Test Measurements, S/W Version C.7 (E-Series), 1.0.5 (T-Series) . 21

APPENDIX A-4: Signal I/O Definitions, S/W Version C.7 (E-Series), 1.0.5 (T-Series) 25

APPENDIX A-5: DAS Functions, S/W Version C.7 (E-Series), 1.0.5 (T-Series)..... 29

Appendix A-6: DAS Functions 31

APPENDIX A-7: MODBUS Register Map..... 34

This page intentionally left blank.

APPENDIX A-1: Software Menu Trees, S/W Version C.7 (E-Series), 1.0.5 (T-Series)

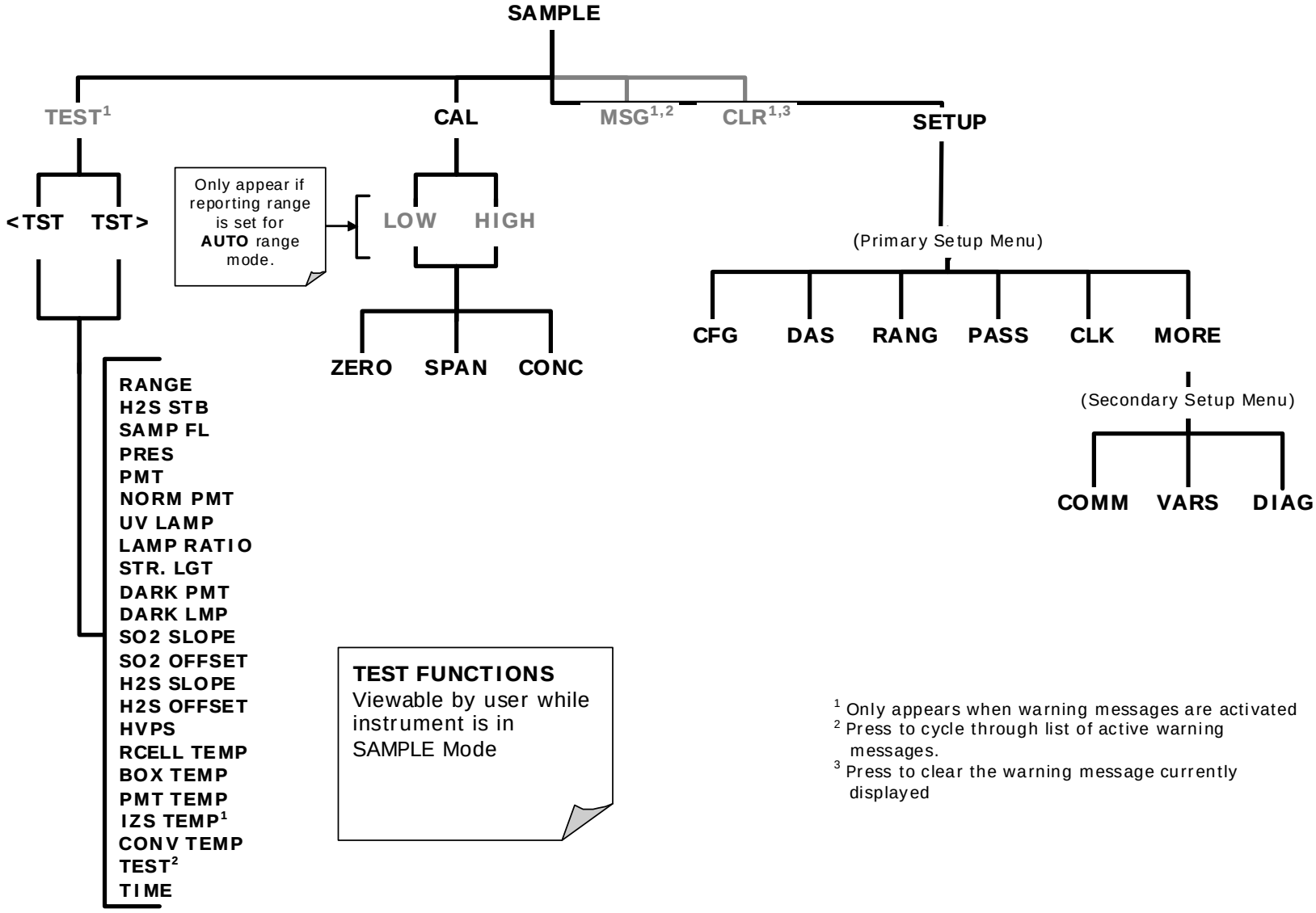

Figure A-1: Basic Sample Display Menu

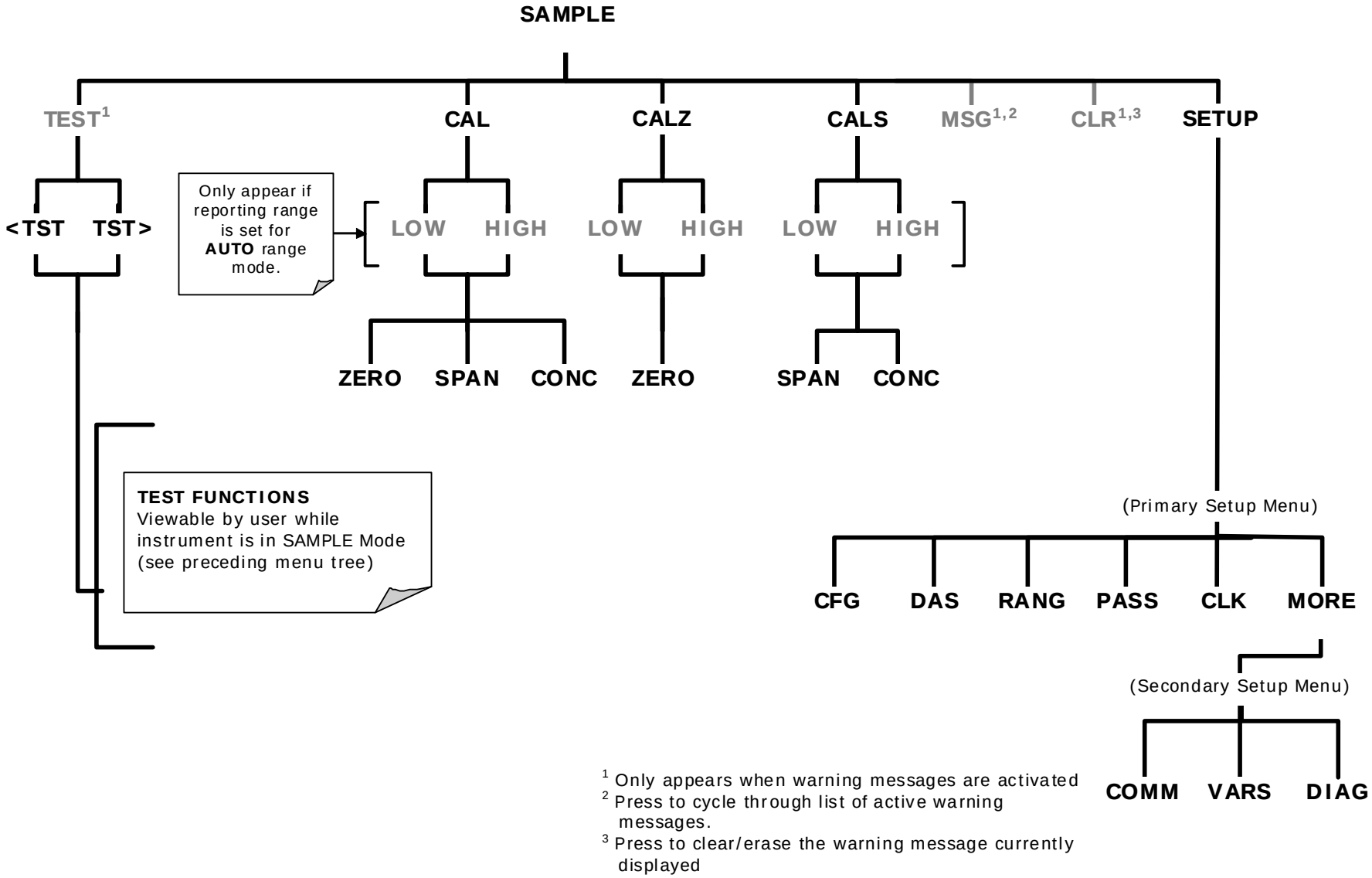

Figure A-2: Sample Display Menu - Units with Z/S Valve or IZS Option installed

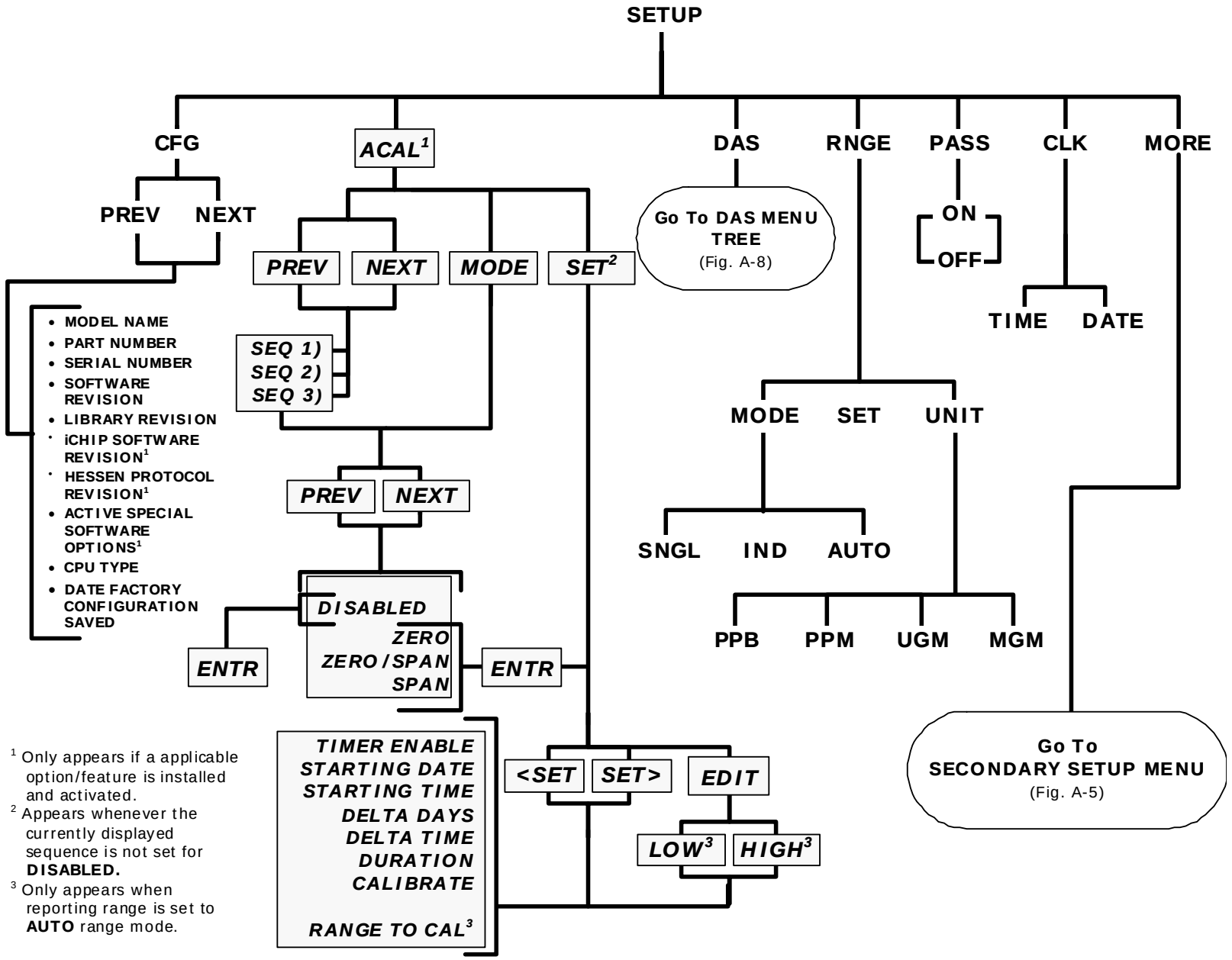

Figure A-3: Primary Setup Menu (Except DAS)

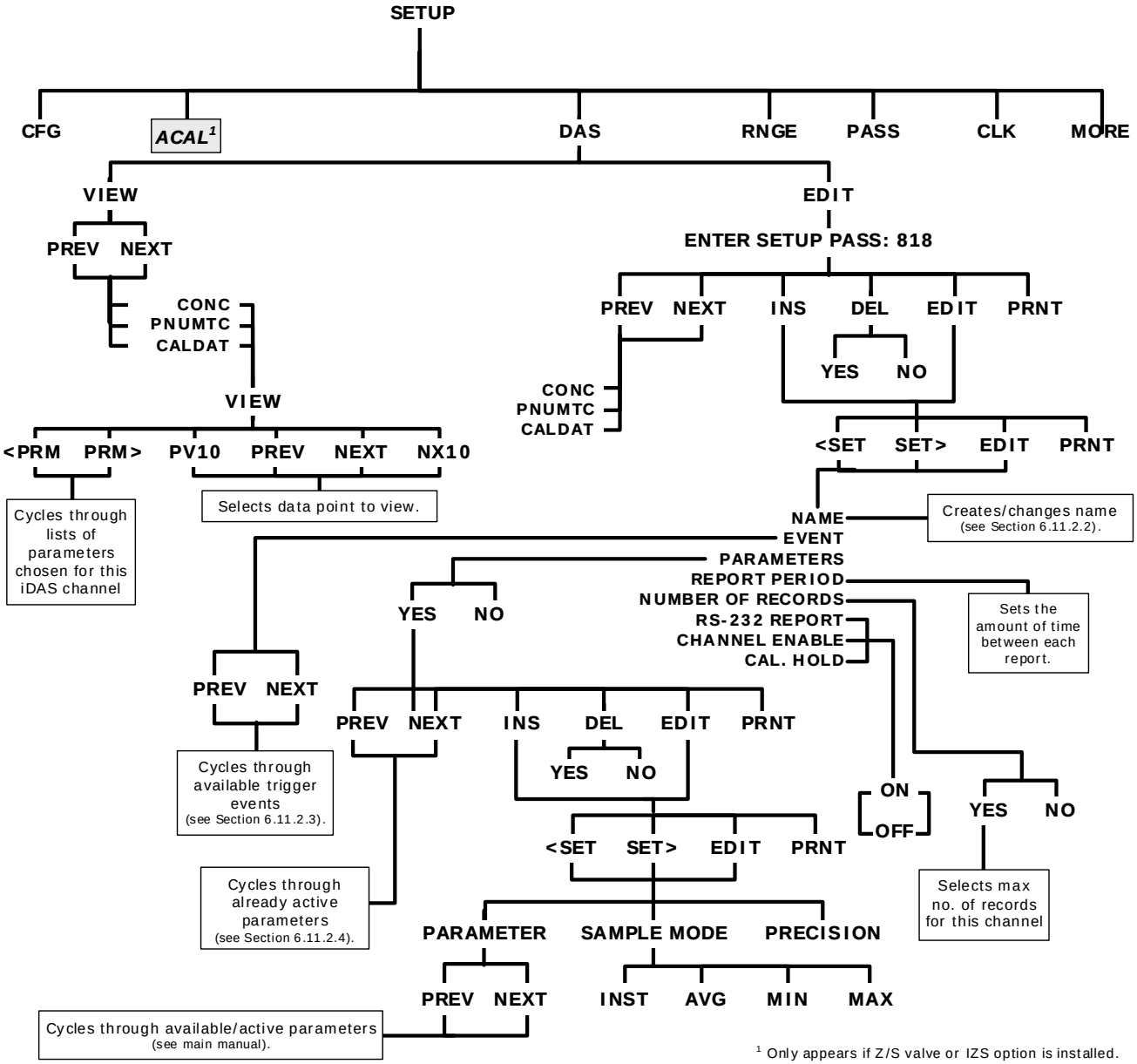

Figure A-4: Primary Setup Menu (DAS)

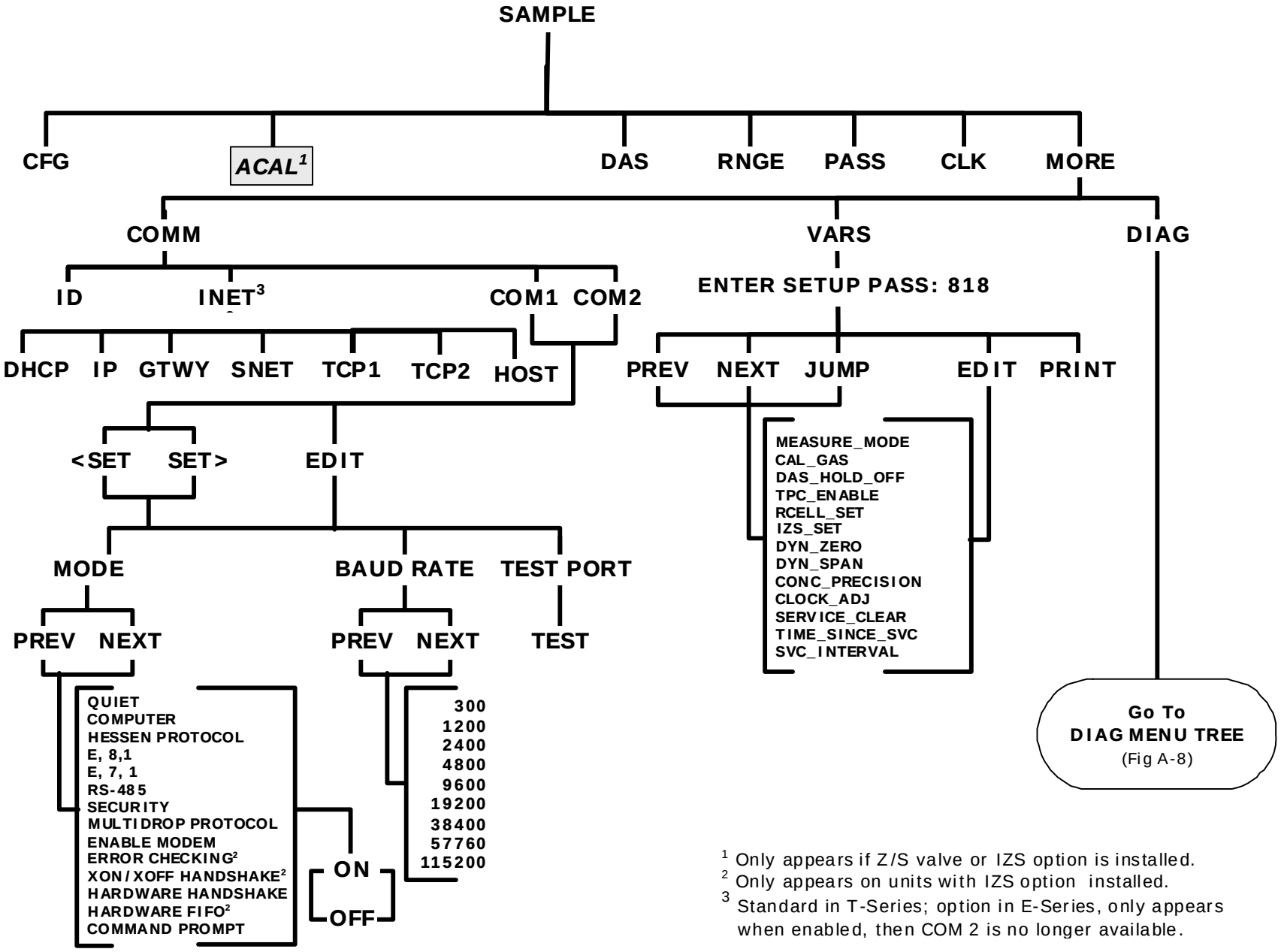

[1] Only appears if Z/S valve or IZS option is installed.
[2] Only appears on units with IZS option installed.
[3] Standard in T-Series; option in E-Series, only appears when enabled, then COM 2 is no longer available.

Figure A-5: Secondary Setup Menu (COMM & VARS)

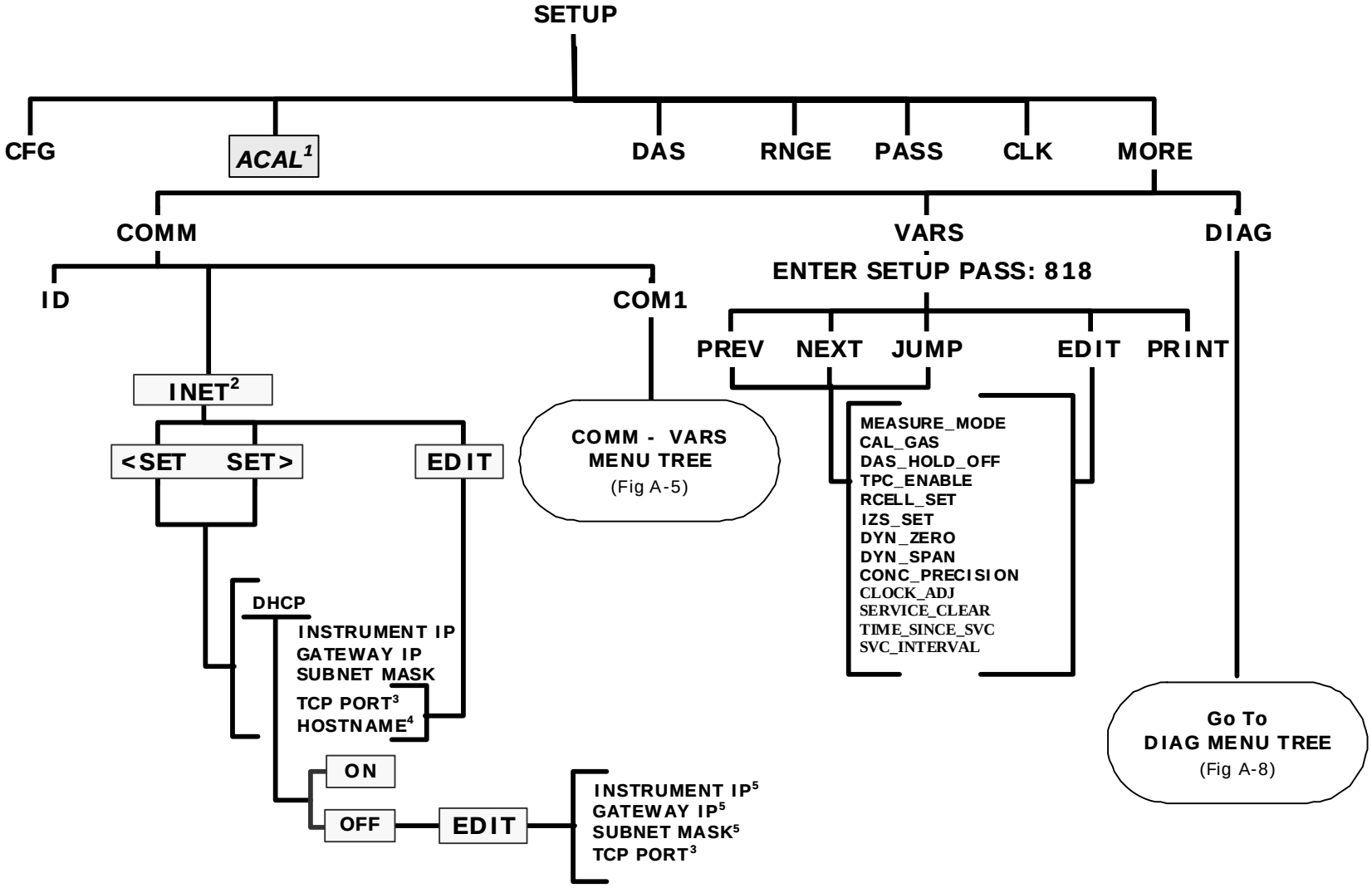

[1] Only appears if a valve option is installed.
[2] Standard in T-Series; for E-Series, only appears when the Ethernet card (option 63) is installed.
[3] Although **TCP PORT** is editable regardless of the **DHCP** state, do not change the setting for this property unless instructed to by Teledyne Instruments Customer Service personnel.
[4] **HOST NAME** is only editable when DHCP is **ON**.
[5] **INSTRUMENT IP**, **GATEWAY IP** & **SUBNET MASK** are only editable when DHCP is **OFF**.

Figure A-6: Secondary Setup Menu

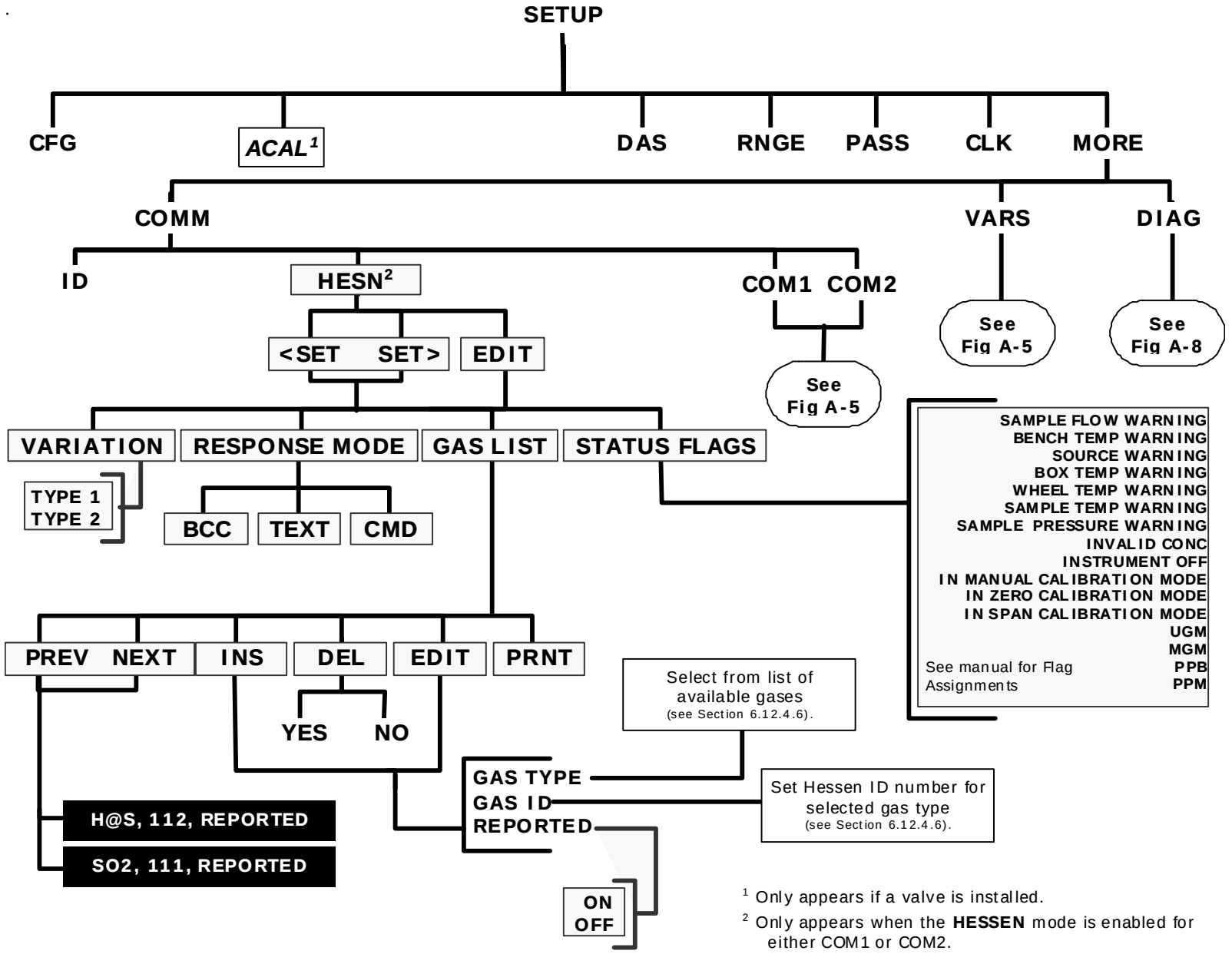

Figure A-7: Secondary Setup Menu - HESSEN Submenu

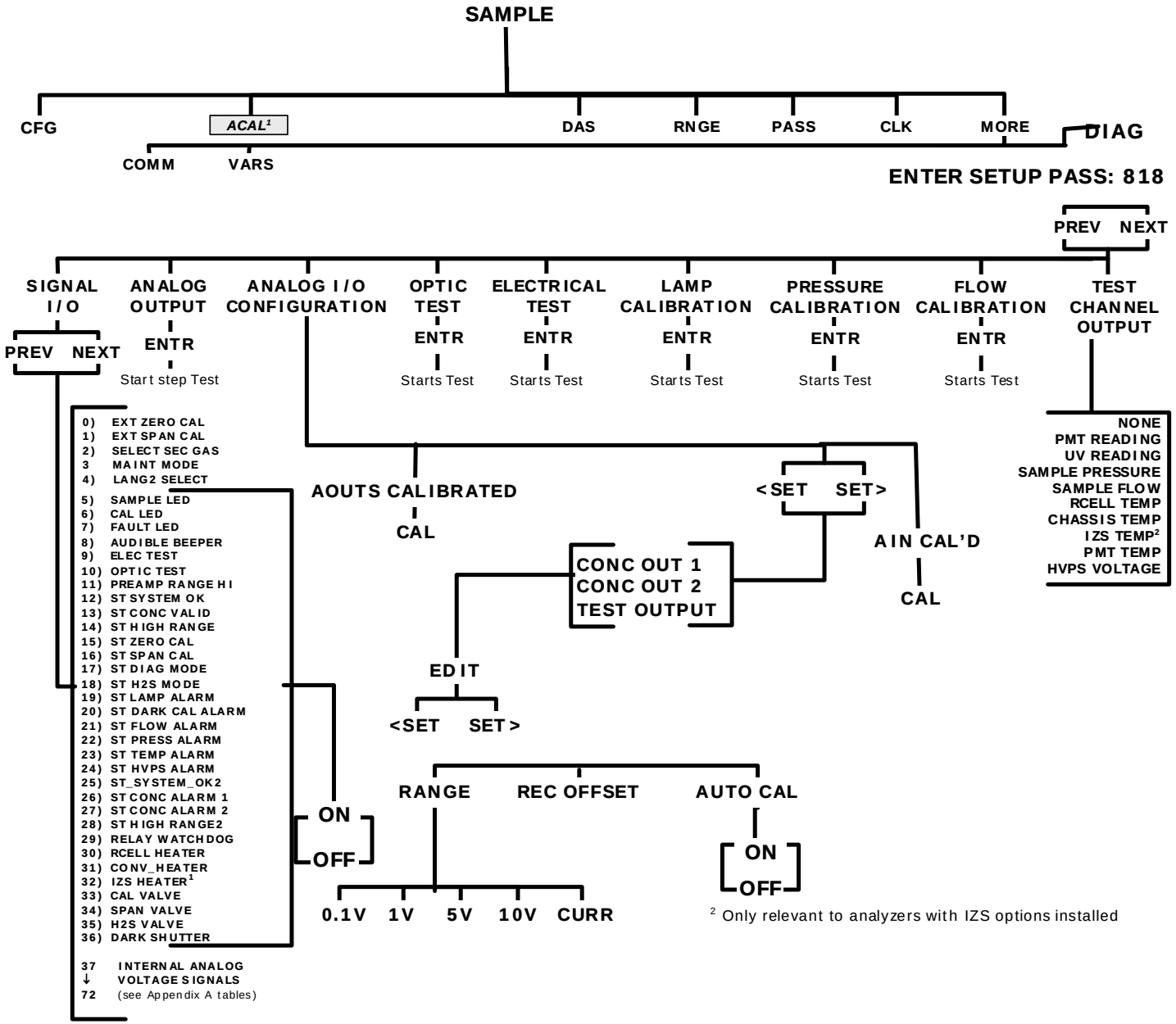

Figure A-8: Secondary Setup Menu (DIAG)

APPENDIX A-2: Setup Variables For Serial I/O, S/W Version C.7 (E-Series), 1.0.5 (T-Series)

Table A-1: Setup Variables

Setup Variable	Numeric Units	Default Value	Value Range	Description
Low Access Level Setup Variables (818 password)				
MEASURE_MODE	—	SO2-H2S, TRS [6]	SO2, H2S, TRS [6], SO2-H2S, SO2-TRS [6], H2S-TRS [6], SO2-H2S-TRS [6], SO2-H2S-REMOTE, H2S-SO2-REMOTE	Gas measurement mode. Enclose value in double quotes (") when setting from the RS-232 interface.
CAL_GAS	—	DEF	DEF, SO2, H2S	Selects calibration gas (i.e. valve position, as opposed to slope/offset). *DEF* selects default behavior, in which valve position and slope/offset are the same. Enclose value in double quotes (") when setting from the RS-232 interface.
DAS_HOLD_OFF	Minutes	15	0.5–20	Duration of DAS hold off period.
TPC_ENABLE	—	ON	OFF, ON	ON enables temperature and pressure compensation; OFF disables it.
RCELL_SET	ºC	50 Warnings: 45–55	30–70	Reaction cell temperature set point and warning limits.
IZS_SET	ºC	50 Warnings: 45–55	30–70	IZS temperature set point and warning limits.
DYN_ZERO	—	OFF	OFF, ON	ON enables contact closure dynamic zero; OFF disables it.
DYN_SPAN	—	OFF	OFF, ON	ON enables contact closure dynamic span; OFF disables it.

Setup Variable	Numeric Units	Default Value	Value Range	Description
CONC_PRECISION	—	1	AUTO, 0, 1, 2, 3, 4	Number of digits to display to the right of the decimal point for concentrations on the display. Enclose value in double quotes (“) when setting from the RS-232 interface.
CLOCK_ADJ	Sec./Day	0	-60–60	Time-of-day clock speed adjustment.
SERVICE_CLEAR	—	OFF	OFF ON	ON resets the service interval timer.
TIME_SINCE_SVC	Hours	0	0–500000	Time since last service.
SVC_INTERVAL	Hours	0	0–100000	Sets the interval between service reminders.
Medium Access Level Setup Variables (929 password)				
LANGUAGE_SELECT	—	ENGL	ENGL, SECD, EXTN	Selects the language to use for the user interface. Enclose value in double quotes (“) when setting from the RS-232 interface.
LATCH_WARNINGS	—	ON	ON, OFF	ON enables latching warning messages; OFF disables latching
DAYLIGHTSAVING_ENABLE	—	ON	ON, OFF	ON enables Daylight Saving Time (DST) change; OFF disables DST.
MAINT_TIMEOUT	Hours	2	0.1–100	Time until automatically switching out of software-controlled maintenance mode.
MEASURE_PERIOD	Minutes	10	1–60	Length of time to measure each gas.
MEASURE_DELAY	Minutes	3	0.1–20	How long to defer sampling after switching streams.
FLUSH_DURATION [7]	Seconds	10	0.1–100	Length of time to flush prior to measuring each gas.
CONV_TIME	—	33 MS	33 MS, 66 MS, 133 MS, 266 MS, 533 MS, 1 SEC, 2 SEC	Conversion time for PMT and UV detector channels. Enclose value in double quotes (“) when setting from the RS-232 interface.
DWELL_TIME	Seconds	1	0.1–10	Dwell time before taking each sample.
FILT_SIZE	Samples	240	1–480	Moving average filter size.
FILT_ASIZE	Samples	20	1–100	Moving average filter size in adaptive mode.

Setup Variable	Numeric Units	Default Value	Value Range	Description
FILT_DELTA	PPB	20	1–100	Absolute change to trigger adaptive filter.
FILT_PCT	%	5	1–100	Percent change to trigger adaptive filter.
FILT_DELAY	Seconds	180	0–300	Delay before leaving adaptive filter mode.
FILT_ADAPT	—	ON	OFF, ON	ON enables adaptive filter; OFF disables it.
DIL_FACTOR	—	1	0.1–1000	Dilution factor if dilution enabled with *FACTORY_OPT* variable.
USER_UNITS	—	PPB	PPB, PPM, UGM, MGM	Concentration units for user interface. Enclose value in double quotes (“) when setting from the RS-232 interface.
LAMP_CAL	mV	3500	1000–5000	Last calibrated UV lamp reading.
LAMP_GAIN	—	0.9	0.5–1.5	UV lamp compensation attenuation factor.
TEMPCO_GAIN	—	0.15	0.01–10	Temperature coefficient attenuation factor for pressure readings.
PMT_TARG_CONC [9]	Conc	400	0.01–9999.99	Target SO_2 concentration during PMT calibration.
PMT_UPDATE_PERIOD [9]	Seconds	10	1–100	Period between HVPS gain updates during PMT calibration.
PMT_CAL_TIMEOUT [9]	Minutes	5	1–100	Maximum time for PMT calibration to succeed.
HVPS_ADJUST [9]	—	0	0–200	HVPS gain adjustment.
HVPS_INTEG [9]	Gain	5	0–500	Integral coefficient for adjusting HVPS gain during PMT calibration.
HVPS_STABIL [9]	—	1	0.1–10	HVPS gain must stabilize to within this limit for PMT calibration to succeed.
PMT_ADJUST [9]	—	0	0–65535	PMT gain adjustment.
SLOPE_CONST	—	8	0.1–10	Constant to make visible slope close to 1.
DARK_ENABLE	—	ON, OFF [9]	OFF, ON	ON enables PMT/UV dark calibration; OFF disables it.
DARK_FREQ	Minutes	30	0.1–1440	Dark calibration period.
DARK_PRE_DWELL	Seconds	10	1–60	Dwell time after closing dark shutter or turning off lamp or selecting preamp range.
DARK_POST_DWELL	Seconds	10	1–180	Dwell time after opening dark shutter or turning on lamp.

Setup Variable	Numeric Units	Default Value	Value Range	Description
DARK_SAMPLES	Samples	5	1–10	Number of dark samples to average.
DARK_FSIZE	Samples	2	1–100	Dark offset moving average filter size.
DARK_LIMIT	mV	200	0–1000	Maximum dark offset allowed.
SO2_SPAN1	Conc	400	0.1–50000	Target SO_2 concentration during span calibration of range 1.
SO2_SPAN2	Conc	400	0.1–50000	Target SO_2 concentration during span calibration of range 2.
SO2_SLOPE1	PPB/mV	1	0.25–4	SO_2 slope for range 1.
SO2_SLOPE2	PPB/mV	1	0.25–4	SO_2 slope for range 2.
SO2_OFFSET1	mV	0	-1500–1500	SO_2 offset for range 1.
SO2_OFFSET2	mV	0	-1500–1500	SO_2 offset for range 2.
H2S_SPAN1	Conc	400	0.1–50000	Target H_2S concentration during span calibration of range 1.
H2S_SPAN2	Conc	400	0.1–50000	Target H_2S concentration during span calibration of range 2.
H2S_SLOPE1	PPB/mV	1	0.25–4	H_2S slope for range 1.
H2S_SLOPE2	PPB/mV	1	0.25–4	H_2S slope for range 2.
H2S_OFFSET1	mV	0	-1500–1500	H_2S offset for range 1.
H2S_OFFSET2	mV	0	-1500–1500	H_2S offset for range 2.
CE_FACTOR1	—	1	0.8–1.2	Converter efficiency factor for H2S/TRS for range 1.
CE_FACTOR2	—	1	0.8–1.2	Converter efficiency factor for H2S/TRS for range 2.
TRS_SPAN1 [6]	Conc	400	0.1–50000	Target TRS concentration during span calibration of range 1.
TRS_SPAN2 [6]	Conc	400	0.1–50000	Target TRS concentration during span calibration of range 2.
TRS_SLOPE1 [6]	PPB/mV	1	0.25–4	TRS slope for range 1.
TRS_SLOPE2 [6]	PPB/mV	1	0.25–4	TRS slope for range 2.
TRS_OFFSET1 [6]	mV	0	-1500–1500	TRS offset for range 1.
TRS_OFFSET2 [6]	mV	0	-1500–1500	TRS offset for range 2.
TRS_CE_FACTOR1 [6]	—	1	0.8–1.2	Converter efficiency factor for TRS for range 1.
TRS_CE_FACTOR2 [6]	—	1	0.8–1.2	Converter efficiency factor for TRS for range 2.
RANGE_MODE	—	SNGL	SNGL, IND, AUTO	Range control mode. Enclose value in double quotes (“) when setting from the RS-232 interface.

Setup Variable	Numeric Units	Default Value	Value Range	Description
PHYS_RANGE1	PPM	2	0.1–2500	Low pre-amp range.
PHYS_RANGE2	PPM	20	0.1–2500	High pre-amp range.
CONC_RANGE1	Conc	500	0.1–50000	D/A concentration range 1.
CONC_RANGE2	Conc	500	0.1–50000	D/A concentration range 2.
CONC_RANGE3 [6]	Conc	500	0.1–50000	D/A concentration range 3.
OXY_FLOW_SET [4]	cc/m	150 Warnings: 50–300	0–500	Nominal oxygenator flow set point and warning limits.
OXY_FLOW_SLOPE [4]	—	1	0.5–1.5	Slope term to correct oxygenator flow rate.
SAMP_FLOW_SET	cc/m	700 Warnings: 350–1200	0–1200	Sample flow set point for flow calculation and warning limits.
SAMP_FLOW_SLOPE	—	1	0.5–1.5	Sample flow slope correction factor (adjusted flow = measured flow x slope).
SFLOW_FILT_SIZE	Samples	50	1–200	Sample flow adaptive moving average filter size.
SAMP_PRESS_SET	"Hg	29.92 Warnings: 15–35	0–100	Sample pressure set point for pressure compensation and warning limits.
CONV_TYPE [2]	—	MOLY	NONE, MOLY	Converter type.
CONV_SET [2]	ºC	315 Warnings: 310–320	0–350	Converter temperature set point and warning limits.
BOX_SET	ºC	30 Warnings: 8–50	5–60	Box temperature warning limits. Set point is not used.
PMT_SET	ºC	7, 15 [9] Warnings: 2–12, 2–20 [9]	0–40	PMT temperature set point and warning limits.

Setup Variable	Numeric Units	Default Value	Value Range	Description
RS232_MODE	BitFlag	0	0–65535	RS-232 COM1 mode flags. Add values to combine flags. 1 = quiet mode 2 = computer mode 4 = enable security 16 = enable Hessen protocol [5] 32 = enable multi-drop 64 = enable modem 128 = ignore RS-232 line errors 256 = disable XON / XOFF support 512 = disable hardware FIFOs 1024 = enable RS-485 mode 2048 = even parity, 7 data bits, 1 stop bit 4096 = enable command prompt
BAUD_RATE	—	115200	300, 1200, 2400, 4800, 9600, 19200, 38400, 57600, 115200	RS-232 COM1 baud rate. Enclose value in double quotes (“) when setting from the RS-232 interface.
MODEM_INIT	—	“AT Y0 &D0 &H0 &I0 S0=2 &B0 &N6 &M0 E0 Q1 &W0”	Any character in the allowed character set. Up to 100 characters long.	RS-232 COM1 modem initialization string. Sent verbatim plus carriage return to modem on power up or manually. Enclose value in double quotes (“) when setting from the RS-232 interface.
RS232_MODE2	BitFlag	0	0–65535	RS-232 COM2 mode flags. *(Same settings as RS232_MODE.)*

Setup Variable	Numeric Units	Default Value	Value Range	Description
BAUD_RATE2	—	19200	300, 1200, 2400, 4800, 9600, 19200, 38400, 57600, 115200	RS-232 COM2 baud rate. Enclose value in double quotes (“) when setting from the RS-232 interface.
MODEM_INIT2	—	“AT Y0 &D0 &H0 &I0 S0=2 &B0 &N6 &M0 E0 Q1 &W0”	Any character in the allowed character set. Up to 100 characters long.	RS-232 COM2 modem initialization string. Sent verbatim plus carriage return to modem on power up or manually. Enclose value in double quotes (“) when setting from the RS-232 interface.
RS232_PASS	Password	940331	0–999999	RS-232 log on password.
MACHINE_ID	ID	101 [2], 102 [3], 108 [4]	0–9999	Unique ID number for instrument.
COMMAND_PROMPT	—	“Cmd> ”	Any character in the allowed character set. Up to 100 characters long.	RS-232 interface command prompt. Displayed only if enabled with *RS232_MODE* variable. Enclose value in double quotes (“) when setting from the RS-232 interface.
TEST_CHAN_ID	—	NONE	NONE, PMT READING, UV READING, OXY FLOW[4], SAMPLE FLOW, SAMPLE PRESSURE, RCELL TEMP, CHASSIS TEMP, IZS TEMP, PMT TEMP, CONV TEMP [2], HVPS VOLTAGE	Diagnostic analog output ID. Enclose value in double quotes (“) when setting from the RS-232 interface.

Setup Variable	Numeric Units	Default Value	Value Range	Description
REMOTE_CAL_MODE	—	SO2-LOW	SO2-LOW, SO2-HIGH, H2S-LOW, H2S-HIGH, TRS-LOW[6], TRS-HIGH[6]	Gas and range to calibrate during contact-closure and Hessen calibration. Enclose value in double quotes (“) when setting from the RS-232 interface.
HOLD_DAC_ON_CAL	—	OFF	OFF, ON	ON holds D/A outputs during zero/span calibration; OFF permits D/A outputs to change.
PASS_ENABLE	—	OFF	OFF, ON	ON enables passwords; OFF disables them.
RCELL_CYCLE	Seconds	2	0.5–30	Reaction cell temperature control cycle period.
RCELL_PROP	1/ºC	0.3 (prop. band = 3.3 ºC)	0–10	Reaction cell temperature PID proportional coefficient.
RCELL_INTEG	—	0.005	0–10	Reaction cell temperature PID integral coefficient.
RCELL_DERIV	—	0.5	0–10	Reaction cell temperature PID derivative coefficient.
IZS_CYCLE	Seconds	2	0.5–30	IZS temperature control cycle period.
IZS_PROP	1/ºC	1 (prop. band = 1 ºC)	0–10	IZS temperature PID proportional coefficient.
IZS_INTEG	—	0.03	0–10	IZS temperature PID integral coefficient.
IZS_DERIV	—	0	0–10	IZS temperature PID derivative coefficient.
HVPS_SET	Volts	650 Warnings: 400–900	0–2000	High voltage power supply warning limits. Set point is not used.
MAX_PMT_DETECTOR	mV	4995	0–5000	PMT detector maximum warning limit.
PHOTO_ABS_LIMITS	mV	450 Warnings: 125–625	0–5000	Pre-amplified UV lamp minimum/maximum warning limits. Set point is not used.
UV_LAMP_LIMITS	mV	3500 Warnings: 1000–4995	0–5000	UV lamp minimum/maximum warning limits. Set point is not used.
ELEC_TEST_LEVEL [9]	—	0	0–65535	Electrical test level setting.
OPTIC_TEST_LEVEL [9]	—	0	0–65535	Optical test level setting.

Setup Variable	Numeric Units	Default Value	Value Range	Description
SERIAL_NUMBER	—	"00000000"	Any character in the allowed character set. Up to 100 characters long.	Unique serial number for instrument. Enclose value in double quotes (") when setting from the RS-232 interface.
DISP_INTENSITY	—	HIGH	HIGH, MED, LOW, DIM	Front panel display intensity. Enclose value in double quotes (") when setting from the RS-232 interface.
I2C_RESET_ENABLE	—	ON	OFF, ON	I^2C bus automatic reset enable.
CLOCK_FORMAT	—	"TIME=%H:%M:%S"	Any character in the allowed character set. Up to 100 characters long.	Time-of-day clock format flags. Enclose value in double quotes (") when setting from the RS-232 interface. "%a" = Abbreviated weekday name. "%b" = Abbreviated month name. "%d" = Day of month as decimal number (01 – 31). "%H" = Hour in 24-hour format (00 – 23). "%I" = Hour in 12-hour format (01 – 12). "%j" = Day of year as decimal number (001 – 366). "%m" = Month as decimal number (01 – 12). "%M" = Minute as decimal number (00 – 59). "%p" = A.M./P.M. indicator for 12-hour clock. "%S" = Second as decimal number (00 – 59). "%w" = Weekday as decimal number (0 – 6; Sunday is 0). "%y" = Year without century, as decimal number (00 – 99). "%Y" = Year with century, as decimal number. "%%" = Percent sign.

Setup Variable	Numeric Units	Default Value	Value Range	Description
ALARM_TRIGGER [8]	Cycles	3	1–100	Number of times concentration must exceed limit to trigger alarm.
FACTORY_OPT	BitFlag	0	0–65535	Factory option flags. Add values to combine flags. 1 = enable dilution factor 2 = zero/span valves installed 4 = IZS installed (implies zero/span valves installed) 16 = display units in concentration field 32 = enable software-controlled maintenance mode 128 = enable switch-controlled maintenance mode 2048 = enable Internet option

[1] All instances of “H2S” in T101, M101E are changed to “TRS” in T102, M102E, and “TS” in T108, M108E.

[2] T101, M101E.

[3] T102, M102E.

[4] T108, M108E.

[5] Must power-cycle instrument for these options to fully take effect.

[6] Triple-gas option.

[7] Fast measurement option.

[8] Concentration alarm option.

[9] T108U, M108EU.

APPENDIX A-3: Warnings and Test Measurements, S/W Version C.7 (E-Series), 1.0.5 (T-Series)

Table A-2: Warning Messages

Name [1]	Message Text	Description
Warnings		
WSYSRES	SYSTEM RESET	Instrument was power-cycled or the CPU was reset.
WDATAINIT	DATA INITIALIZED	Data storage was erased.
WCONFIGINIT	CONFIG INITIALIZED	Configuration storage was reset to factory configuration or erased.
WSO2ALARM1 [7]	SO2 ALARM 1 WARN	SO_2 concentration alarm limit #1 exceeded
WSO2ALARM2 [7]	SO2 ALARM 2 WARN	SO_2 concentration alarm limit #2 exceeded
WH2SALARM1 [7]	H2S ALARM 1 WARN	H_2S/TRS concentration alarm limit #1 exceeded
WH2SALARM2 [7]	H2S ALARM 2 WARN	H_2S/TRS concentration alarm limit #2 exceeded
WTRSALARM1 [7+5]	TRS ALARM 1 WARN	TRS concentration alarm limit #1 exceeded
WTRSALARM2 [7+5]	TRS ALARM 2 WARN	TRS concentration alarm limit #2 exceeded
WPMT	PMT DET WARNING	PMT detector outside of warning limits specified by *DETECTOR_LIMIT* variable.
WUVLAMP	UV LAMP WARNING	UV lamp reading outside of warning limits specified by *DETECTOR_LIMIT* variable.
WOXYFLOW [6]	OXY FLOW WARNING	Oxygenator flow outside of warning limits specified by *OXY_FLOW_SET* variable.
WSAMPFLOW	SAMPLE FLOW WARN	Sample flow outside of warning limits specified by *SAMP_FLOW_SET* variable.
WSAMPPRESS	SAMPLE PRESS WARN	Sample pressure outside of warning limits specified by *SAMP_PRESS_SET* variable.
WCONVTEMP [4]	CONV TEMP WARNING	Converter temperature outside of warning limits specified by *CONV_SET* variable.
WBOXTEMP	BOX TEMP WARNING	Chassis temperature outside of warning limits specified by *BOX_SET* variable.
WRCELLTEMP	RCELL TEMP WARNING	Reaction cell temperature outside of warning limits specified by *RCELL_SET* variable.
WIZSTEMP	IZS TEMP WARNING	IZS temperature outside of warning limits specified by *IZS_SET* variable.

WPMTTEMP	PMT TEMP WARNING	PMT temperature outside of warning limits specified by *PMT_SET* variable.
WDARKCAL	DARK CAL WARNING	Dark offset above limit specified by *DARK_LIMIT* variable.
WHVPS	HVPS WARNING	High voltage power supply output outside of warning limits specified by *HVPS_SET* variable.
WDYNZERO	CANNOT DYN ZERO	Contact closure zero calibration failed while *DYN_ZERO* was set to *ON*.
WDYNSPAN	CANNOT DYN SPAN	Contact closure span calibration failed while *DYN_SPAN* was set to *ON*.
WREARBOARD	REAR BOARD NOT DET	Rear board was not detected during power up.
WRELAYBOARD	RELAY BOARD WARN	Firmware is unable to communicate with the relay board.
WFRONTPANEL	FRONT PANEL WARN	Firmware is unable to communicate with the front panel.
WANALOGCAL	ANALOG CAL WARNING	The A/D or at least one D/A channel has not been calibrated.

[1] The name is used to request a message via the RS-232 interface, as in “T BOXTEMP”.

[2] Engineering software.

[3] Current instrument units.

[4] T101, M101E.

[5] Triple-gas option.

[6] T108, M108E.

[7] Concentration alarm option.

[8] T108U, M108EU.

[9] Optional.

Table A-3: Test Measurements

TEST Measurement	Message Text	DESCRIPTION
RANGE	RANGE=500.0 PPB [3]	D/A range in single or auto-range modes.
RANGE1	RANGE1=500.0 PPB [3]	D/A #1 range in independent range mode.
RANGE2	RANGE2=500.0 PPB [3]	D/A #2 range in independent range mode.
RANGE3 [5]	RANGE3=500.0 PPB [3]	D/A #3 range in independent range mode.
STABILITY	SO2 STB=11.4 PPB [3]	Concentration stability #1.
STABILITY2 [8]	SO2 STB2=6.3 PPB [3]	Concentration stability #2.
RESPONSE [2]	RSP=1.11(0.00) SEC	Instrument response. Length of each signal processing loop. Time in parenthesis is standard deviation.
OXYFLOW [6]	OXY FLOW=150 CC/M	Oxygenator flow rate
SAMPFLOW	SAMP FL=700 CC/M	Sample flow rate.
SAMPPRESS	PRES=29.9 IN-HG-A	Sample pressure.
PMTDET	PMT=762.5 MV	Raw PMT reading.
NORMPMTDET	NORM PMT=742.9 MV	PMT reading normalized for temperature, pressure, auto-zero offset, but not range.
UVDET	UV LAMP=3457.6 MV	UV lamp reading.
STABILITYUV [9]	UV STB=5.607 MV	UV lamp stability reading.
LAMPRATIO	LAMP RATIO=100.0 %	UV lamp ratio of current reading divided by calibrated reading.
STRAYLIGHT	STR. LGT=0.1 PPB	Stray light offset.
DARKPMT	DRK PMT=19.6 MV	PMT dark offset.
DARKLAMP	DRK LMP=42.4 MV	UV lamp dark offset.
SO2SLOPE	SO2 SLOPE=1.000	Slope for current range, computed during zero/span calibration.
SO2OFFSET	SO2 OFFS=0.0 MV	Offset for current range, computed during zero/span calibration.
H2SSLOPE	H2S SLOPE=1.000	Slope for current range, computed during zero/span calibration.
H2SOFFSET	H2S OFFS=0.0 MV	Offset for current range, computed during zero/span calibration.
TRSSLOPE [5]	TRS SLOPE=1.000	Slope for current range, computed during zero/span calibration.
TRSOFFSET [5]	TRS OFFS=0.0 MV	Offset for current range, computed during zero/span calibration.
HVPS	HVPS=650 VOLTS	High voltage power supply output.
RCELLDUTY [2]	RCELL ON=0.00 SEC	Reaction cell temperature control duty cycle.
RCELLTEMP	RCELL TEMP=52.1 C	Reaction cell temperature.
BOXTEMP	BOX TEMP=35.5 C	Internal chassis temperature.

TEST Measurement	Message Text	DESCRIPTION
PMTTEMP	PMT TEMP=7.0 C	PMT temperature.
IZSDUTY [2]	IZS ON=0.00 SEC	IZS temperature control duty cycle.
IZSTEMP	IZS TEMP=52.2 C	IZS temperature.
CONVTEMP [4]	CONV TEMP=315.0 C	Converter temperature.
SO2	SO2=261.4 PPB	SO_2 concentration for current range.
H2S/TRS	H2S/TRS=331.6 PPB	H_2S/TRS concentration for current range.
TRS [5]	TRS=378.4 PPB	TRS concentration for current range.
TESTCHAN	TEST=3721.1 MV	Value output to *TEST_OUTPUT* analog output, selected with *TEST_CHAN_ID* variable.
CLOCKTIME	TIME=10:38:27	Current instrument time of day clock.

[1] The name is used to request a message via the RS-232 interface, as in “T BOXTEMP”.

[2] Engineering software.

[3] Current instrument units.

[4] T101, M101E.

[5] Triple-gas option.

[6] T108, M108E.

[7] Concentration alarm option.

[8] T108U, M108EU.

[9] Optional.

APPENDIX A-4: Signal I/O Definitions, S/W Version C.7 (E-Series), 1.0.5 (T-Series)

Table A-4: Signal I/O Definitions

Signal Name	Bit or Channel Number	Description
Internal inputs, U7, J108, pins 9–16 = bits 0–7, default I/O address 322 hex		
	0–7	Spare
AUX board digital outputs, default I^2C address 30 hex		
ELEC_TEST [7]	0	1 = electrical test on 0 = off
OPTIC_TEST [7]	1	1 = optic test on 0 = off
DARK_TEST [7]	2	1 = dark test on 0 = off
PREAMP_RANGE_HI [7]	3	1 = select high preamp range 0 = select low range
Internal outputs, U8, J108, pins 1–8 = bits 0–7, default I/O address 322 hex		
ELEC_TEST	0	1 = electrical test on 0 = off
OPTIC_TEST	1	1 = optic test on 0 = off
PREAMP_RANGE_HI	2	1 = select high preamp range 0 = select low range
	3–5	Spare
I2C_RESET	6	1 = reset I^2C peripherals 0 = normal
I2C_DRV_RST	7	0 = hardware reset 8584 chip 1 = normal
Control inputs, U11, J1004, pins 1–6 = bits 0–5, default I/O address 321 hex		
EXT_ZERO_CAL	0	0 = go into zero calibration 1 = exit zero calibration
EXT_SPAN_CAL	1	0 = go into span calibration 1 = exit span calibration
SELECT_SEC_GAS	2	0 = select second gas specified by *MEASURE_MODE* variable (when one of the "remote" modes are used) 1 = select first gas
	3–5	Spare
	6–7	Always 1
Control inputs, U14, J1006, pins 1–6 = bits 0–5, default I/O address 325 hex		
	0–5	Spare

Signal Name	Bit or Channel Number	Description
	6–7	Always 1
Control outputs, U17, J1008, pins 1–8 = bits 0–7, default I/O address 321 hex		
	0–7	Spare
Control outputs, U21, J1008, pins 9–12 = bits 0–3, default I/O address 325 hex		
	0–3	Spare
Alarm outputs, U21, J1009, pins 1–12 = bits 4–7, default I/O address 325 hex		
ST_SYSTEM_OK2	4	1 = system OK 0 = any alarm condition or in diagnostics mode
ST_CONC_ALARM_1 [5]	5	1 = conc. limit 1 exceeded 0 = conc. OK
ST_CONC_ALARM_2 [5]	6	1 = conc. limit 2 exceeded 0 = conc. OK
ST_HIGH_RANGE2 [6]	7	1 = high auto-range in use (mirrors *ST_HIGH_RANGE* status output) 0 = low auto-range
A status outputs, U24, J1017, pins 1–8 = bits 0–7, default I/O address 323 hex		
ST_SYSTEM_OK	0	0 = system OK 1 = any alarm condition
ST_CONC_VALID	1	0 = conc. valid 1 = warnings or other conditions that affect validity of concentration
ST_HIGH_RANGE	2	0 = high auto-range in use 1 = low auto-range
ST_ZERO_CAL	3	0 = in zero calibration 1 = not in zero
ST_SPAN_CAL	4	0 = in span calibration 1 = not in span
ST_DIAG_MODE	5	0 = in diagnostic mode 1 = not in diagnostic mode
ST_H2S_MODE	6	0 = secondary gas mode (H2S/TRS) 1 = primary gas mode (SO2)
ST_TRS_MODE [3]	7	0 = TRS gas mode 1 = primary gas mode (SO2)
B status outputs, U27, J1018, pins 1–8 = bits 0–7, default I/O address 324 hex		
ST_LAMP_ALARM	0	0 = lamp intensity low 1 = lamp intensity OK
ST_DARK_CAL_ALARM	1	0 = dark cal. warning 1 = dark cal. OK
ST_FLOW_ALARM	2	0 = any flow alarm 1 = all flows OK
ST_PRESS_ALARM	3	0 = any pressure alarm

Signal Name	Bit or Channel Number	Description
		1 = all pressures OK
ST_TEMP_ALARM	4	0 = any temperature alarm 1 = all temperatures OK
ST_HVPS_ALARM	5	0 = HVPS alarm 1 = HVPS OK
	6–7	Spare
Front panel I²C keyboard, default I²C address 4E hex		
MAINT_MODE	5 (input)	0 = maintenance mode 1 = normal mode
LANG2_SELECT	6 (input)	0 = select second language 1 = select first language (English)
SAMPLE_LED	8 (output)	0 = sample LED on 1 = off
CAL_LED	9 (output)	0 = cal. LED on 1 = off
FAULT_LED	10 (output)	0 = fault LED on 1 = off
AUDIBLE_BEEPER	14 (output)	0 = beeper on (for diagnostic testing only) 1 = off
Relay board digital output (PCF8575), default I²C address 44 hex		
RELAY_WATCHDOG	0	Alternate between 0 and 1 at least every 5 seconds to keep relay board active
RCELL_HEATER	1	0 = reaction cell heater on 1 = off
CONV_HEATER [1]	2	0 = converter cell heater on 1 = off
	3	Spare
IZS_HEATER	4	0 = IZS heater on 1 = off
	5	Spare
CAL_VALVE	6	0 = let cal. gas in 1 = let sample gas in
SPAN_VALVE	7	0 = let span gas in 1 = let zero gas in
TRS_VALVE [3]	8	0 = switch to TRS gas position 1 = primary gas position (SO2)
H2S_VALVE, TRS_VALVE	9	0 = switch to secondary gas position (H2S/TRS) 1 = primary gas position (SO2)
TS_VALVE [2]		0 = primary gas position (SO2) 1 = switch to secondary gas position (TS) [2]

Signal Name	Bit or Channel Number	Description
DARK_SHUTTER	10	0 = close dark shutter 1 = open
FLUSH_VALVE [4]	11	0 = open flow restrictor bypass (flush) valve 1 = close
	12–15	Spare
AUX board analog inputs, default I²C address 30 hex		
PMT_SIGNAL [7]	0 (register number)	PMT detector
UVLAMP_SIGNAL [7]	1	UV lamp intensity
NORM_PMT_SIGNAL [7]	2	Normalized PMT detector
PMT_TEMP [7]	3	PMT temperature
HVPS_VOLTAGE [7]	4	HV power supply output
PMT_DARK [7]	5	PMT reading during dark cycles
LAMP_DARK [7]	6	Lamp reading during dark cycles
AGND_DARK [7]	7	AGND reading during dark cycles
AGND_LIGHT [7]	8	AGND reading during light cycles
VREF_DARK [7]	9	VREF4096 reading during dark cycles
VREF_LIGHT [7]	10	VREF4096 reading during light cycles
Rear board primary MUX analog inputs		
PMT_SIGNAL	0	PMT detector
HVPS_VOLTAGE	1	HV power supply output
PMT_TEMP	2	PMT temperature
UVLAMP_SIGNAL	3	UV lamp intensity
	4	Temperature MUX
PHOTO_ABS	5	Pre-amplified UV lamp intensity
OXY_FLOW [2]	6	Oxygenator flow rate
SAMPLE_PRESSURE	7	Sample pressure
TEST_INPUT_8	8	Diagnostic test input
REF_4096_MV	9	4.096V reference from MAX6241
SAMPLE_FLOW	10	Sample flow rate
TEST_INPUT_11	11	Diagnostic test input
CONV_TEMP [1]	12	Converter temperature
	13	Spare (thermocouple input?)
	14	DAC MUX
REF_GND	15	Ground reference
Rear board temperature MUX analog inputs		
BOX_TEMP	0	Internal box temperature
RCELL_TEMP	1	Reaction cell temperature
IZS_TEMP	2	IZS temperature
	3	Spare

Signal Name	Bit or Channel Number	Description
TEMP_INPUT_4	4	Diagnostic temperature input
TEMP_INPUT_5	5	Diagnostic temperature input
TEMP_INPUT_6	6	Diagnostic temperature input
	7	Spare
Rear board DAC MUX analog inputs		
DAC_CHAN_1	0	DAC channel 1 loopback
DAC_CHAN_2	1	DAC channel 2 loopback
DAC_CHAN_3	2	DAC channel 3 loopback
DAC_CHAN_4	3	DAC channel 4 loopback
Rear board analog outputs		
CONC_OUT_1	0	Concentration output #1
CONC_OUT_2	1	Concentration output #2
CONC_OUT_3 [3]	2	Concentration output #3
TEST_OUTPUT	3	Test measurement output

[1] T101, M101E.

[2] T108, M108E.

[3] Triple-gas option.

[4] Fast measurement option.

[5] Concentration alarm option.

[6] High auto range relay option

[7] T108U, M108EU.

APPENDIX A-5: DAS Functions, S/W Version C.7 (E-Series), 1.0.5 (T-Series)

Table A-5: DAS Trigger Events

Name	Description
ATIMER	Automatic timer expired
EXITZR	Exit zero calibration mode
EXITHS	Exit high span calibration mode
EXITMP	Exit multi-point calibration mode
SLPCHG	Slope and offset recalculated
EXITDG	Exit diagnostic mode
PMTDTW	PMT detector warning
UVLMPW	UV lamp warning
DRKCLW	Dark calibration warning
CONCW1 [2]	Concentration limit 1 exceeded
CONCW2 [2]	Concentration limit 2 exceeded
RCTMPW	Reaction cell temperature warning
IZTMPW	IZS temperature warning
PTEMPW	PMT temperature warning
CTEMPW [1]	Converter temperature warning
OFLOWW	Oxygenator flow warning
SFLOWW	Sample flow warning
SPRESW	Sample pressure warning
BTEMPW	Box temperature warning
HVPSW	High voltage power supply warning

[1] T101, M101E.

[2] Concentration alarm option.

Appendix A-6: DAS Functions

Name	Description	Units
PMTDET	PMT detector reading	mV
PHABS	Pre-amplified UV lamp intensity reading	mV
UVDET	UV lamp intensity reading	mV
LAMPR	UV lamp ratio of calibrated intensity	%
DRKPMT	PMT electrical offset	mV
DARKUV	UV lamp electrical offset	mV
S2SLP1	SO_2 slope for range #1	PPB/mV
S2SLP2	SO_2 slope for range #2	PPB/mV
H2SLP1 or TRSLP1	H_2S/TRS slope for range #1	PPB/mV
H2SLP2 or TRSLP2	H_2S/TRS slope for range #2	PPB/mV
TRSLP1 [2]	TRS slope for range #1	PPB/mV
TRSLP2 [2]	TRS slope for range #2	PPB/mV
S2OFS1	SO_2 offset for range #1	mV
S2OFS2	SO_2 offset for range #2	mV
H2OFS1 or TROFS1	H_2S/TRS offset for range #1	mV
H2OFS2 or TROFS2	H_2S/TRS offset for range #2	mV
TROFS1 [2]	TRS offset for range #1	mV
TROFS2 [2]	TRS offset for range #2	mV
S2ZSC1	SO_2 concentration for range #1 during zero/span calibration, just before computing new slope and offset	PPB
S2ZSC2	SO_2 concentration for range #2 during zero/span calibration, just before computing new slope and offset	PPB
H2ZSC1 or TRZSC1	H_2S/TRS concentration for range #1 during zero/span calibration, just before computing new slope and offset	PPB
H2ZSC2 or TRZSC2	H_2S/TRS concentration for range #2 during zero/span calibration, just before computing new slope and offset	PPB
TRZSC1 [2]	TRS concentration for range #1 during zero/span calibration, just before computing new slope and offset	PPB
TRZSC2 [2]	TRS concentration for range #2 during zero/span calibration, just before computing new slope and offset	PPB
S2CNC1	SO_2 concentration for range #1	PPB
S2CNC2	SO_2 concentration for range #2	PPB
H2CNC1 or TRCNC1	H_2S/TRS concentration for range #1	PPB
H2CNC2 or TRCNC2	H_2S/TRS concentration for range #2	PPB
TRCNC1 [2]	TRS concentration for range #1	PPB
TRCNC2 [2]	TRS concentration for range #2	PPB
STABIL	Concentration stability #1	PPB
STABL2 [4]	Concentration stability #2	PPB
STABUV [5]	UV lamp stability	mV
STRLGT	Stray light reading	PPB

Name	Description	Units
RCTEMP	Reaction cell temperature	°C
IZSTMP	IZS temperature	°C
PMTTMP	PMT temperature	°C
CNVEF1	Converter efficiency factor for range #1	—
CNVEF2	Converter efficiency factor for range #2	—
TRCEF1 [2]	TRS converter efficiency factor for range #1	—
TRCEF2 [2]	TRS converter efficiency factor for range #2	—
CNVTMP [1]	Converter temperature	°C
OXYFLW [3]	Oxygenator flow rate	cc/m
SMPFLW	Sample flow rate	cc/m
SMPPRS	Sample pressure	"Hg
BOXTMP	Internal box temperature	°C
HVPS	High voltage power supply output	Volts
TEST8	Diagnostic test input (TEST_INPUT_8)	mV
TEST11	Diagnostic test input (TEST_INPUT_11)	mV
TEMP4	Diagnostic temperature input (TEMP_INPUT_4)	°C
TEMP5	Diagnostic temperature input (TEMP_INPUT_5)	°C
TEMP6	Diagnostic temperature input (TEMP_INPUT_6)	°C
REFGND	Ground reference (REF_GND)	mV
RF4096	4096 mV reference (REF_4096_MV)	mV
XIN1[6]	Channel 1 Analog In	
XIN1SLPE[6]	Channel 1 Analog In Slope	
XIN1OFST[6]	Channel 1 Analog In Offset	
XIN2[6]	Channel 2 Analog In	
XIN2SLPE[6]	Channel 2 Analog In Slope	
XIN2OFST[6]	Channel 2 Analog In Offset	
XIN3[6]	Channel 3 Analog In	
XIN3SLPE[6]	Channel 3 Analog In Slope	
XIN3OFST[6]	Channel 3 Analog In Offset	
XIN4[6]	Channel 4 Analog In	
XIN4SLPE[6]	Channel 4 Analog In Slope	
XIN4OFST[6]	Channel 4 Analog In Offset	
XIN5[6]	Channel 5 Analog In	
XIN5SLPE[6]	Channel 5 Analog In Slope	
XIN5OFST[6]	Channel 5 Analog In Offset	
XIN6[6]	Channel 6 Analog In	
XIN6SLPE[6]	Channel 6 Analog In Slope	
XIN6OFST[6]	Channel 6 Analog In Offset	

Name	Description	Units
XIN7[6]	Channel 7 Analog In	
XIN7SLPE[6]	Channel 7 Analog In Slope	
XIN7OFST[6]	Channel 7 Analog In Offset	
XIN8[6]	Channel 8 Analog In	
XIN8SLPE[6]	Channel 8 Analog In Slope	
XIN8OFST[6]	Channel 8 Analog In Offset	
AGNDDK [4]	AGND reading during dark cycles	mV
AGNDLT [4]	AGND reading during light cycles	mV
RF4VDK [4]	VREF4096 reading during dark cycles	mV
RF4VLT [4]	VREF4096 reading during light cycles	mV

[1] T101, M101E.

[2] Triple-gas option.

[3] T108, M108E.

[4] T108U, M108EU.

[5] Optional.

[6] Analog In option, T-Series only.

APPENDIX A-7: MODBUS Register Map

MODBUS Register Address (dec., 0-based)	Description	Units
MODBUS Floating Point Input Registers (32-bit IEEE 754 format; read in high-word, low-word order; read-only)		
0	PMT detector reading	mV
2	UV lamp intensity reading	mV
4	UV lamp ratio of calibrated intensity	%
6	PMT electrical offset	mV
8	UV lamp electrical offset	mV
10	SO_2 slope for range #1	PPB/mV
12	SO_2 slope for range #2	PPB/mV
14	H_2S/TRS slope for range #1	PPB/mV
16	H_2S/TRS slope for range #2	PPB/mV
18	SO_2 offset for range #1	mV
20	SO_2 offset for range #2	mV
22	H_2S/TRS offset for range #1	mV
24	H_2S/TRS offset for range #2	mV
26	SO_2 concentration for range #1 during zero/span calibration, just before computing new slope and offset	PPB
28	SO_2 concentration for range #2 during zero/span calibration, just before computing new slope and offset	PPB
30	H_2S/TRS concentration for range #1 during zero/span calibration, just before computing new slope and offset	PPB
32	H_2S/TRS concentration for range #2 during zero/span calibration, just before computing new slope and offset	PPB
34	SO_2 concentration for range #1	PPB
36	SO_2 concentration for range #2	PPB
38	H_2S/TRS concentration for range #1	PPB
40	H_2S/TRS concentration for range #2	PPB
42	Concentration stability #1	PPB
44	Stray light reading	PPB
46	Reaction cell temperature	°C
48	IZS temperature	°C
50	PMT temperature	°C
52	Converter efficiency factor for range #1	—
54	Converter efficiency factor for range #2	—
56	Sample flow rate	cc/m

58	Sample pressure	"Hg
60	Internal box temperature	°C
62	High voltage power supply output	Volts
64	Diagnostic test input (TEST_INPUT_8)	mV
66	Diagnostic test input (TEST_INPUT_11)	mV
68	Diagnostic temperature input (TEMP_INPUT_4)	°C
70	Diagnostic temperature input (TEMP_INPUT_5)	°C
72	Diagnostic temperature input (TEMP_INPUT_6)	°C
74	Ground reference (REF_GND)	mV
76	4096 mV reference (REF_4096_MV)	mV
78	Pre-amplified UV lamp intensity reading	mV
80 [1]	Converter temperature	°C
82 [5]	Oxygenator flow rate	cc/m
84 [6]	Concentration stability #2	PPB
86 [7]	UV lamp stability	mV
100 [4]	TRS slope for range #1	PPB/mV
102 [4]	TRS slope for range #2	PPB/mV
104 [4]	TRS offset for range #1	mV
106 [4]	TRS offset for range #2	mV
108 [4]	TRS concentration for range #1 during zero/span calibration, just before computing new slope and offset	PPB
110 [4]	TRS concentration for range #2 during zero/span calibration, just before computing new slope and offset	PPB
112 [4]	TRS concentration for range #1	PPB
114 [4]	TRS concentration for range #2	PPB
116 [4]	TRS converter efficiency factor for range #1	—
118 [4]	TRS converter efficiency factor for range #2	—
MODBUS Floating Point Holding Registers (32-bit IEEE 754 format; read/write in high-word, low-word order; read/write)		
0	Maps to *SO2_SPAN1* variable; target conc. for range #1	Conc. units
2	Maps to *SO2_SPAN2* variable; target conc. for range #2	Conc. units
4	Maps to *H2S_SPAN1* variable; target conc. for range #1	Conc. units
6	Maps to *H2S_SPAN2* variable; target conc. for range #2	Conc. units
100 [4]	Maps to *TRS_SPAN1* variable; target conc. for range #1	Conc. units
102 [4]	Maps to *TRS_SPAN2* variable; target conc. for range #2	Conc. units
MODBUS Discrete Input Registers (single-bit; read-only)		
0	PMT detector warning	
1	UV detector warning	
2	Dark calibration warning	
3	Box temperature warning	

4	PMT temperature warning
5	Reaction cell temperature warning
6	Sample pressure warning
7	HVPS warning
8	System reset warning
9	Rear board communication warning
10	Relay board communication warning
11	Front panel communication warning
12	Analog calibration warning
13	Dynamic zero warning
14	Dynamic span warning
15	Invalid concentration
16	In zero calibration mode
17	In span calibration mode
18	In multi-point calibration mode
19	System status is OK (same meaning as *SYSTEM_OK* I/O signal)
20	Sample flow warning
21	IZS temperature warning
22 [1]	Converter temperature warning
23 [5]	Oxygenator flow warning
24 [2]	SO_2 concentration alarm limit #1 exceeded
25 [2]	SO_2 concentration alarm limit #2 exceeded
26 [2]	H_2S/TRS concentration alarm limit #1 exceeded
27 [2]	H_2S/TRS concentration alarm limit #2 exceeded
28 [2+4]	TRS concentration alarm limit #1 exceeded
29 [2+4]	TRS concentration alarm limit #2 exceeded
MODBUS Coil Registers (single-bit; read/write)	
0	Maps to relay output signal 36 (*MB_RELAY_36* in signal I/O list)
1	Maps to relay output signal 37 (*MB_RELAY_37* in signal I/O list)
2	Maps to relay output signal 38 (*MB_RELAY_38* in signal I/O list)
3	Maps to relay output signal 39 (*MB_RELAY_39* in signal I/O list)
20 [3]	Triggers zero calibration of range #1 (on enters cal.; off exits cal.)
21 [3]	Triggers span calibration of range #1 (on enters cal.; off exits cal.)
22 [3]	Triggers zero calibration of range #2 (on enters cal.; off exits cal.)
23 [3]	Triggers span calibration of range #2 (on enters cal.; off exits cal.)

[1] T101, M101E.

[2] Concentration alarm option.

[3] Set *DYN_ZERO* or *DYN_SPAN* variables to *ON* to enable calculating new slope or offset. Otherwise a calibration check is performed.

[4] Triple-gas option.

[5] T108, M108E.

[6] T108U, M108EU.

[7] Optional.

This page intentionally left blank.

T101 Spare Parts List

(Reference: 073470000, 1/19/2011 10:10:13 AM)

PARTNUMBER	DESCRIPTION
000940100	CD, ORIFICE, .003 GREEN
000940400	CD, ORIFICE, .004 BLUE
000940800	CD, ORIFICE, .012 (NO PAINT)
002690000	CD, LENS, PL-CON (KB)
002700000	CD, LENS, BI-CON (KB)
002720000	CD, FILTER, 330NM (KB)
003290000	THERMISTOR, BASIC (VENDOR ASSY)(KB)
005960000	AKIT, EXP, 6LBS ACT CHARCOAL (2 BT=1)
009690000	AKIT, TFE FLTR ELEM (FL6 100=1) 47mm
009690100	AKIT, TFE FLTR ELEM (FL6, 30=1) 47mm
011630000	HVPS INSULATOR GASKET (KB)
012720000	ASSY, CELL ADAPTOR, (KB)
013140000	ASSY, COOLER FAN (NOX/SOX)
013210000	ASSY, VACUUM MANIFOLD
013390000	ASSY, KICKER
013400000	CD, PMT, SO2, (KB)
013420000	ASSY, ROTARY SOLENOID
013570000	THERMISTOR HOUSING ASSY SOX/NOX(KB)
014080100	ASSY, HVPS, SOX/NOX
014400100	OPTION, ZERO AIR SCRUBBER
014750000	AKIT, EXP KIT, IZS
016290000	WINDOW, SAMPLE FILTER, 47MM (KB)
016300700	ASSY, SAMPLE FILTER, 47MM, ANG BKT
037860000	ORING, TEFLON, RETAINING RING, 47MM (KB)
040010000	ASSY, FAN REAR PANEL
040030100	PCA, PRESS SENSORS (1X), w/FM4
041020000	ASSY, MOLY CONV, WELD, (KB)
041620100	ASSY, SO2 SENSOR (KB)
041800400	PCA, PMT PREAMP, VR
042410200	ASSY, PUMP, INT, SOX/O3/IR *
043570000	AKIT, EXPENDABLES
045230200	PCA, RELAY CARD
046250000	ASSY, RXCELL HEATER/FUSE
046260000	ASSY, THERMISTOR, RXCELL (KB)
046880000	ASSY, SO2 SCRUBBER, PTFE CARTRIDGE
048830000	AKIT, EXP KIT, EXHAUST CLNSR, SILCA GEL
049310100	PCA,TEC DRIVER,PMT,(KB)
049760100	ASSY, TC PROG PLUG, MINI HICON, 'K', TC1
050510200	PUMP, INT, 115/240V * (KB)
050610100	OPTION, 100-120V/60Hz (KB)
050610200	OPTION, 100-120V/50Hz (KB)
050610300	OPTION, 220-240V/50Hz, (KB)
050610400	OPTION, 220-240V/60Hz (KB)
050630100	PCA, REF DET w/OP20, DUAL OUT
051990000	ASSY, SCRUBBER, INLINE EXHAUST, DISPOS
052660000	ASSY, HEATER/THERM, IZS
052930200	ASSY, BAND HEATER TYPE K, NOX
055100200	ASSY, OPTION, PUMP, 240V *
055560000	ASSY, VALVE, VA59 W/DIODE, 5" LEADS

T101 Spare Parts List

(Reference: 073470000, 1/19/2011 10:10:13 AM)

PARTNUMBER	DESCRIPTION
058021100	PCA, MOTHERBD, GEN 5-ICOP
061930000	PCA, UV LAMP DRIVER, GEN-2 43mA *
062390000	ASSY, MOLY GUTS w/WOOL
066970000	PCA, INTRF. LCD TOUCH SCRN, F/P
067240000	CPU, PC-104, VSX-6154E, ICOP *
067300000	PCA, AUX-I/O BD, ETHERNET, ANALOG & USB
067300100	PCA, AUX-I/O BOARD, ETHERNET
067300200	PCA, AUX-I/O BOARD, ETHERNET & USB
067900000	LCD MODULE, W/TOUCHSCREEN(KB)
068810000	PCA, LVDS TRANSMITTER BOARD
069500000	PCA, SERIAL & VIDEO INTERFACE BOARD
072150000	ASSY. TOUCHSCREEN CONTROL MODULE
072660000	MANUAL, T101, OPERATORS
073480100	DOM, w/SOFTWARE, T101 *
CN0000073	POWER ENTRY, 120/60 (KB)
CN0000458	PLUG, 12, MC 1.5/12-ST-3.81 (KB)
CN0000520	PLUG, 10, MC 1.5/10-ST-3.81 (KB)
FL0000001	FILTER, SS (KB)
FL0000003	FILTER, DFU (KB)
FM0000004	FLOWMETER (KB)
HW0000005	FOOT
HW0000020	SPRING
HW0000030	ISOLATOR
HW0000031	FERRULE, SHOCKMOUNT
HW0000036	TFE TAPE, 1/4" (48 FT/ROLL)
HW0000101	ISOLATOR
HW0000453	SUPPORT, CIRCUIT BD, 3/16" ICOP
HW0000685	LATCH, MAGNETIC, FRONT PANEL
KIT000093	AKIT, REPLCMNT(3187)214NM FLTR (BF)
KIT000095	AKIT, REPLACEMENT COOLER
KIT000207	KIT, RELAY RETROFIT
KIT000219	AKIT, 4-20MA CURRENT OUTPUT
KIT000236	KIT, UV LAMP, w/ADAPTER (BIR)
KIT000253	ASSY & TEST, SPARE PS37
KIT000254	ASSY & TEST, SPARE PS38
KIT000261	AKIT, SOX SCRUBBER MATERIAL (CH17), 1oz
OP0000031	WINDOW, QUARTZ, 1/2"DIA, .063" THICK (KB
OR0000001	ORING, 2-006VT *(KB)
OR0000004	ORING, 2-029V
OR0000006	ORING, 2-038V
OR0000007	ORING, 2-039V
OR0000015	ORING, 2-117V
OR0000016	ORING, 2-120V
OR0000025	ORING, 2-133V
OR0000027	ORING, 2-042V
OR0000039	ORING, 2-012V
OR0000046	ORING, 2-019V
OR0000083	ORING, 105M, 1MM W X 5 MM ID, VITON
OR0000084	ORING, 2-020V

T101 Spare Parts List

(Reference: 073470000, 1/19/2011 10:10:13 AM)

PARTNUMBER	DESCRIPTION
OR0000094	ORING, 2-228V, 50 DURO VITON(KB)
PU0000022	REBUILD KIT, FOR PU20 & 04241 (KB)
RL0000015	RELAY, DPDT, (KB)
SW0000025	SWITCH, POWER, CIRC BREAK, VDE/CE *(KB)
SW0000059	PRESSURE SENSOR, 0-15 PSIA, ALL SEN
WR0000008	POWER CORD, 10A(KB)

This page intentionally left blank.

Appendix C Warranty/Repair Questionnaire T101, M101E (05494D DCN5798)	TELEDYNE ADVANCED POLLUTION INSTRUMENTATION A Teledyne Technologies Company

Company: _____ Contact Name: _____

Phone Number: _____ Fax Number: _____ Email: _____

Site Address: _____

Can we connect to the instrument? If so, provide IP address or modem #: _____

Model Serial Number: _____ Firmware revision: _____

The serial number can be found on the back of the instrument, the firmware revision is displayed in the upper left corner of the display when pressing SETUP on the front panel (Example: **C.3**).

1. List all front panel error/warning messages: _____

_____

2. Please complete the following table: (Depending on options installed, not all test parameters shown below may be available in your instrument)

PARAMETER	RECORDED VALUE	ACCEPTABLE VALUE	PARAMETER	RECORDED VALUE	ACCEPTABLE VALUE
RANGE	ppb/ppm	50 ppb - 20 ppm	**SO2 SLOPE**		1.0 ± 0.3
H2S STB	ppb	≤ 1 ppb with zero air	**SO2 OFFS**	mV	< 250
SAMP FL	cm^3/min	600 ± 75	**H2S SLOPE**		
PRES	IN-HG-A	~5"<ambient	**H2S OFFS**	mV	< 250
PMT signal with zero air	mV	-20 to 150	**HVPS**	V	400-900
PMT signal at span gas conc	mV ppb/ppm	0-5000 0-20 000 ppb	**RCELL TEMP**	°C	50 ± 1
NORM PMT at span gas conc	mV ppb/ppm	0-5000 0-20 000 ppb	**BOX TEMP**	°C	Ambient + ~5
UV LAMP	mV	1000 to 4800	**PMT TEMP**	°C	7 ± 2
LAMP RATIO	%	30-120%	**IZS TEMP**	°C	50 ± 3
STR. LGT	ppm	≤ 100 ppb/ zero air	**CONV TEMP**	°C	315 ± 5
DARK PMT	mV	-50 to 200	**ETEST** (DIAG menu)	mV	2000 ± 1000
DARK LAMP	mV	-50 to 200	**OTEST** (DIAG menu)	mV	2000 ± 1000

3. Has the analyzer been checked for leaks? Yes ☐ No ☐ For proper flows? Yes ☐ No ☐

4. What are the failure symptoms? _____

_____

_____ Continue on back if necessary

5. Which tests have you done trying to solve the problem? _____

_____

_____ *Continue on back if necessary*

6. If possible, fax a portion of a strip chart or email a data file to customer service.

CUSTOMER SERVICE CONTACT INFORMATION: 6565 Nancy Ridge Drive, San Diego, CA 92121.
PHONE: +1 858 657 9800 or 1-800 324 5190. FAX: +1 858 657 9816. EMAIL: api-customerservice@teledyne.com.
You can access and submit an online version of this form at http://www.teledyne-api.com/forms/p-fm101e.asp

Notes and further information: _____

APPENDIX D – Wire List and Electronic Schematics

This page intentionally left blank.

Interconnect List, T101

(Reference 0736501 Rev01)

Revision	Description						Checked	Date	DCN
01	Prototype Release						KV	9/3/10	
		FROM				TO			
Cable PN	Signal	Assembly	PN	J/P	Pin	Assembly	PN	J/P	Pin
0337801	**CBL ASSY, ADD-ON MOLY HEATER**								
	Common1	Relay PCA	045230100	P2	6	Moly Heater	052930200		2
	Load1	Relay PCA	045230100	P2	7	Moly Heater	052930200		1
	AC Neutral	Relay PCA	045230100	P2	10	Moly Heater	052930200		3
0364901	**CBL ASSY, AC POWER**								
	AC Line	Power Entry	CN0000073		L	Power Switch	SW0000025		L
	AC Neutral	Power Entry	CN0000073		N	Power Switch	SW0000025		N
	Power Grnd	Power Entry	CN0000073			Shield			
	Power Grnd	Power Entry	CN0000073			Chassis			
	AC Line Switched	Power Switch	SW0000025		L	PS2 (+12)	068020000	SK2	1
	AC Neu Switched	Power Switch	SW0000025		N	PS2 (+12)	068020000	SK2	3
	Power Grnd	Power Entry	CN0000073			PS2 (+12)	068020000	SK2	2
	AC Line Switched	Power Switch	SW0000025		L	PS1 (+5, ±15)	068010000	SK2	1
	AC Neu Switched	Power Switch	SW0000025		N	PS1 (+5, ±15)	068010000	SK2	3
	Power Grnd	Power Entry	CN0000073			PS1 (+5, ±15)	068010000	SK2	2
	AC Line Switched	Power Switch	SW0000025		L	Relay PCA	045230100	J1	1
	AC Neu Switched	Power Switch	SW0000025		N	Relay PCA	045230100	J1	3
	Power Grnd	Power Entry	CN0000073			Relay PCA	045230100	J1	2
03829	**CBL ASSY, DC POWER TO MOTHERBOARD**								
	DGND	Relay PCA	045230100	J7	1	Motherboard	058021100	J15	1
	+5V	Relay PCA	045230100	J7	2	Motherboard	058021100	J15	2
	AGND	Relay PCA	045230100	J7	3	Motherboard	058021100	J15	3
	+15V	Relay PCA	045230100	J7	4	Motherboard	058021100	J15	4
	AGND	Relay PCA	045230100	J7	5	Motherboard	058021100	J15	5
	-15V	Relay PCA	045230100	J7	6	Motherboard	058021100	J15	6
	+12V RET	Relay PCA	045230100	J7	7	Motherboard	058021100	J15	7
	+12V	Relay PCA	045230100	J7	8	Motherboard	058021100	J15	8
	Chassis Gnd	Relay PCA	045230100	J7	10	Motherboard	058021100	J15	9
04023	**CBL, I2C, RELAY BOARD TO MOTHERBOARD**								
	I2C Serial Clock	Motherboard	058021100	P107	3	Relay PCA	045230100	P3	1
	I2C Serial Data	Motherboard	058021100	P107	5	Relay PCA	045230100	P3	2
	I2C Reset	Motherboard	058021100	P107	2	Relay PCA	045230100	P3	4
	I2C Shield	Motherboard	058021100	P107	6	Relay PCA	045230100	P3	5
0402602	**CBL, IZS HTR/TH, RXCELL & OB TH**								
	RTHA	Motherboard	058021100	P27	7	RX Cell Thermistor	046260000		2
	RTHB	Motherboard	058021100	P27	14	RX Cell Thermistor	046260000		1
	IZTA	Motherboard	058021100	P27	6	IZS Therm/Htr	052660000		2
	IZTB	Motherboard	058021100	P27	13	IZS Therm/Htr	052660000		3
	IZS-L	Relay PCA	045230100	P18	1	IZS Therm/Htr	052660000		4
	IZS-N	Relay PCA	045230100	P18	2	IZS Therm/Htr	052660000		1
	GND	Relay PCA	045230100	P18	11	Shield			
	O2-L	Relay PCA	045230100	P18	6	O2 Sensor Therm/Htr	043420000		4
	O2-N	Relay PCA	045230100	P18	7	O2 Sensor Therm/Htr	043420000		2
	TS3	Relay PCA	045230100	P18	3	Relay PCA	045230100	P18	4
	TS4	Relay PCA	045230100	P18	8	Relay PCA	045230100	P18	9
	N/C	Relay PCA	045230100	P18	12	Shield			
	O2TA	Motherboard	058021100	P27	4	O2 Sensor Therm/Htr	043420000		3
	O2TB	Motherboard	058021100	P27	11	O2 Sensor Therm/Htr	043420000		1
0402701	**CBL, RX CELL HEATERS**								
	Common0	Relay PCA	045230100	P2	1	RX Cell Heaters	046250000		4
	Common0	Relay PCA	045230100	P2	1	RX Cell Heaters	046250000		6
	Load0	Relay PCA	045230100	P2	2	RX Cell Heaters	046250000		3
	TS0	Relay PCA	045230100	P2	3	RX Cell Heaters	046250000		1
	Relay0	Relay PCA	045230100	P2	4	RX Cell Heaters	046250000		2
	AC Neutral	Relay PCA	045230100	P2	5	RX Cell Heaters	046250000		5
	TS2	Relay PCA	045230100	P2	13	Relay PCA	045230100	P2	14
	TS1	Relay PCA	045230100	P2	8	Relay PCA	045230100	P2	9
04105	**CBL, KEYBD TO MTHBRD**								
	Kbd Interupt	LCD Interface PCA	066970000	J1	7	Motherboard	058021100	J106	1
	DGND	LCD Interface PCA	066970000	J1	2	Motherboard	058021100	J106	8
	SDA	LCD Interface PCA	066970000	J1	5	Motherboard	058021100	J106	2
	SCL	LCD Interface PCA	066970000	J1	6	Motherboard	058021100	J106	6
	Shld	LCD Interface PCA	066970000	J1	10	Motherboard	058021100	J106	5

Interconnect List, T101

(Reference 0736501 Rev01)

		FROM				TO			
Cable PN	**Signal**	**Assembly**	**PN**	**J/P**	**Pin**	**Assembly**	**PN**	**J/P**	**Pin**
04176	**CBL, DC POWER TO RELAY BOARD**								
	DGND	Relay PCA	045230100	P8	1	Power Supply Triple	068010000	J1	3
	+5V	Relay PCA	045230100	P8	2	Power Supply Triple	068010000	J1	1
	+15V	Relay PCA	045230100	P8	4	Power Supply Triple	068010000	J1	6
	AGND	Relay PCA	045230100	P8	5	Power Supply Triple	068010000	J1	4
	-15V	Relay PCA	045230100	P8	6	Power Supply Triple	068010000	J1	5
	+12V RET	Relay PCA	045230100	P8	7	Power Supply Single	068020000	J1	3
	+12V	Relay PCA	045230100	P8	8	Power Supply Single	068020000	J1	1
04437	**CBL, PREAMPLIFIER TO TEC**								
	Preamp TEC drive VREF	Preamp PCA	041800400	J1	1	TEC PCA	049310100	J3	1
	Preamp TEC drive CTRL	Preamp PCA	041800400	J1	2	TEC PCA	049310100	J3	2
	Preamp TEC drive AGND	Preamp PCA	041800400	J1	3	TEC PCA	049310100	J3	3
0448501	**CBL, SHUTTER TO RELAY BOARD**								
	+12V RET	Shutter	013420000		1	Relay PCA	045230100	P6	1
	+12V	Shutter	013420000		2	Relay PCA	045230100	P6	2
04488	**CBL, MAIN HARNESS**								
	AGND	Relay PCA	045230100	P5	1	O2 Sensor	049210000	P1	5
	-V15	Relay PCA	045230100	P5	2	O2 Sensor	049210000	P1	6
		Motherboard	058021100	P109	10	O2 Sensor	049210000	P1	9
	O2 SIGNAL-	Motherboard	058021100	P109	7	O2 Sensor	049210000	P1	10
	O2 SIGNAL+	Motherboard	058021100	P109	1	Shield			
	PMT TEMP	Motherboard	058021100	P109	4	PMT Preamp PCA	041800400	P6	5
	HVPS	Motherboard	058021100	P109	5	PMT Preamp PCA	041800400	P6	6
	PMT SIGNAL+	Motherboard	058021100	P109	6	PMT Preamp PCA	041800400	P6	7
	AGND	Motherboard	058021100	P109	12	PMT Preamp PCA	041800400	P6	8
	AGND	Motherboard	058021100	P109	11	Shield			
	ETEST	Motherboard	058021100	P108	8	PMT Preamp PCA	041800400	P6	1
	OTEST	Motherboard	058021100	P108	16	PMT Preamp PCA	041800400	P6	2
	PHYSICAL RANGE	Motherboard	058021100	P108	7	PMT Preamp PCA	041800400	P6	4
	AGND	Motherboard	058021100	P109	9	UV Ref PCA	050630100	P1	4
	CH7	Motherboard	058021100	P109	3	UV Ref PCA	050630100	P1	1
	CH2	Motherboard	058021100	P109	2	UV Ref PCA	050630100	P1	5
	+15V	Relay PCA	045230100	P10	4	UV Ref PCA	050630100	P1	2
	-15V	Relay PCA	045230100	P10	6	UV Ref PCA	050630100	P1	3
	TEC +12V RET	Relay PCA	045230100	P10	7	TEC PCA	049310100		2
	TEC +12V	Relay PCA	045230100	P10	8	TEC PCA	049310100		1
	DISP RET	Relay PCA	045230100	P10	1	LCD Interface PCA	066970000	P14	8
	+5 DISP	Relay PCA	045230100	P10	2	LCD Interface PCA	066970000	P14	1
	EGND	Shield				LCD Interface PCA	066970000	P14	4
	SDA	Lamp Driver PCA	061930000	P1	4	LCD Interface PCA	066970000	P14	5
	SCL	Lamp Driver PCA	061930000	P1	3	LCD Interface PCA	066970000	P14	6
	+12V	Lamp Driver PCA	061930000	P1	1	Relay PCA	045230100	P9	8
	+12RET	Lamp Driver PCA	061930000	P1	2	Relay PCA	045230100	P9	7
	DGND	PMT Preamp PCA	041800400	P5	1	Relay PCA	045230100	P9	1
	VCC	PMT Preamp PCA	041800400	P5	2	Relay PCA	045230100	P9	2
	+15V	PMT Preamp PCA	041800400	P5	4	Relay PCA	045230100	P9	4
	-15V	PMT Preamp PCA	041800400	P5	6	Relay PCA	045230100	P9	6
	DGND	LCD Interface PCA	066970000	P14	2	Relay PCA	045230100	P11	1
	VCC	LCD Interface PCA	066970000	P14	3	Relay PCA	045230100	P11	2
	+12RET	Fan	040010000		1	Relay PCA	045230100	P11	7
	+12V	Fan	040010000		2	Relay PCA	045230100	P11	8
	AGND	Flow Module PCA	040030100	P1	3	Relay PCA	045230100	P11	3
	+15V	Flow Module PCA	040030100	P1	6	Relay PCA	045230100	P11	4
	PRESS SIGNAL 1	Flow Module PCA	040030100	P1	2	Motherboard	058021100	P110	6
	PRESS SIGNAL 2	Flow Module PCA	040030100	P1	4	Motherboard	058021100	P110	5
	FLOW SIGNAL 1	Flow Module PCA	040030100	P1	5	Motherboard	058021100	P110	4
	FLOW SIGNAL 2	Flow Module PCA	040030100	P1	1	Motherboard	058021100	P110	3
	SHIELD	Shield				Motherboard	058021100	P110	12
	SHIELD	Shield				Motherboard	058021100	P110	9
	TC SIGNAL 1	Relay PCA	045230100	P17	1	Motherboard	058021100	P110	2
	TC 1 SIGNAL DGND	Relay PCA	045230100	P17	2	Motherboard	058021100	P110	8
	TC SIGNAL 2	Relay PCA	045230100	P17	3	Motherboard	058021100	P110	1
	TC 2 SIGNAL DGND	Relay PCA	045230100	P17	4	Motherboard	058021100	P110	7

Interconnect List, T101

(Reference 0736501 Rev01)

		FROM				TO			
Cable PN	**Signal**	**Assembly**	**PN**	**J/P**	**Pin**	**Assembly**	**PN**	**J/P**	**Pin**
04562	**CBL, Z/S IZS VALVES**								
	Sample Valve +12V	Relay PCA	045230100	P4	1	SMP/CAL	055560000	P1	1
	Sample Valve +12V RET	Relay PCA	045230100	P4	2	SMP/CAL	055560000	P1	2
	Zero/Span valve +12V	Relay PCA	045230100	P4	3	ZS/HI S	055560100	P1	1
	Zero/Span valve +12V RE	Relay PCA	045230100	P4	4	ZS/HI S	055560100	P1	2
	Low Span Valve +12V	Relay PCA	045230100	P4	5	Lo Span	055560100	P1	1
	Low Span Valve +12V RE	Relay PCA	045230100	P4	6	Lo Span	055560100	P1	2
	AutoZero Valve +12V	Relay PCA	045230100	P4	7	Zero	055560000	P1	1
	AutoZero Valve +12V RE	Relay PCA	045230100	P4	8	Zero	055560000	P1	2
04671	**CBL, MOTHERBOARD TO XMITTER BD (MULTIDROP OPTION**								
	GND	Motherboard	058021100	P12	2	Xmitter bd w/Multidrop	069500000	J4	2
	RX0	Motherboard	058021100	P12	14	Xmitter bd w/Multidrop	069500000	J4	14
	RTS0	Motherboard	058021100	P12	13	Xmitter bd w/Multidrop	069500000	J4	13
	TX0	Motherboard	058021100	P12	12	Xmitter bd w/Multidrop	069500000	J4	12
	CTS0	Motherboard	058021100	P12	11	Xmitter bd w/Multidrop	069500000	J4	11
	RS-GND0	Motherboard	058021100	P12	10	Xmitter bd w/Multidrop	069500000	J4	10
	RTS1	Motherboard	058021100	P12	8	Xmitter bd w/Multidrop	069500000	J4	8
	CTS1/485-	Motherboard	058021100	P12	6	Xmitter bd w/Multidrop	069500000	J4	6
	RX1	Motherboard	058021100	P12	9	Xmitter bd w/Multidrop	069500000	J4	9
	TX1/485+	Motherboard	058021100	P12	7	Xmitter bd w/Multidrop	069500000	J4	7
	RS-GND1	Motherboard	058021100	P12	5	Xmitter bd w/Multidrop	069500000	J4	5
	RX1	Motherboard	058021100	P12	9	Xmitter bd w/Multidrop	069500000	J4	9
	TX1/485+	Motherboard	058021100	P12	7	Xmitter bd w/Multidrop	069500000	J4	7
	RS-GND1	Motherboard	058021100	P12	5	Xmitter bd w/Multidrop	069500000	J4	5
06737	**CBL, I2C to AUX I/O (ANALOG IN OPTION**								
	ATX-	Motherboard	058021100	J106	1	Aux I/O PCA	067300000	J2	1
	ATX+	Motherboard	058021100	J106	2	Aux I/O PCA	067300000	J2	2
	LED0	Motherboard	058021100	J106	3	Aux I/O PCA	067300000	J2	3
	ARX+	Motherboard	058021100	J106	4	Aux I/O PCA	067300000	J2	4
	ARX-	Motherboard	058021100	J106	5	Aux I/O PCA	067300000	J2	5
	LED0+	Motherboard	058021100	J106	6	Aux I/O PCA	067300000	J2	6
	LED1+	Motherboard	058021100	J106	8	Aux I/O PCA	067300000	J2	8
06738	**CBL, CPU COM to AUX I/O (USB OPTION**								
	RXD	CPU PCA	067240000	COM1	1	Aux I/O PCA	0673000 or -02	J3	1
	DCD	CPU PCA	067240000	COM1	2	Aux I/O PCA	0673000 or -02	J3	2
	DTR	CPU PCA	067240000	COM1	3	Aux I/O PCA	0673000 or -02	J3	3
	TXD	CPU PCA	067240000	COM1	4	Aux I/O PCA	0673000 or -02	J3	4
	DSR	CPU PCA	067240000	COM1	5	Aux I/O PCA	0673000 or -02	J3	5
	GND	CPU PCA	067240000	COM1	6	Aux I/O PCA	0673000 or -02	J3	6
	CTS	CPU PCA	067240000	COM1	7	Aux I/O PCA	0673000 or -02	J3	7
	RTS	CPU PCA	067240000	COM1	8	Aux I/O PCA	0673000 or -02	J3	8
	RI	CPU PCA	067240000	COM1	10	Aux I/O PCA	0673000 or -02	J3	10
06738	**CBL, CPU COM to AUX I/O (MULTIDROP OPTION**								
	RXD	CPU PCA	067240000	COM1	1	Xmitter bd w/Multidrop	069500000	J3	1
	DCD	CPU PCA	067240000	COM1	2	Xmitter bd w/Multidrop	069500000	J3	2
	DTR	CPU PCA	067240000	COM1	3	Xmitter bd w/Multidrop	069500000	J3	3
	TXD	CPU PCA	067240000	COM1	4	Xmitter bd w/Multidrop	069500000	J3	4
	DSR	CPU PCA	067240000	COM1	5	Xmitter bd w/Multidrop	069500000	J3	5
	GND	CPU PCA	067240000	COM1	6	Xmitter bd w/Multidrop	069500000	J3	6
	CTS	CPU PCA	067240000	COM1	7	Xmitter bd w/Multidrop	069500000	J3	7
	RTS	CPU PCA	067240000	COM1	8	Xmitter bd w/Multidrop	069500000	J3	8
	RI	CPU PCA	067240000	COM1	10	Xmitter bd w/Multidrop	069500000	J3	10
06739	**CBL, CPU ETHERNET TO AUX I/O**								
	ATX-	CPU PCA	067240000	LAN	1	Aux I/O PCA	06730XXXX	J2	1
	ATX+	CPU PCA	067240000	LAN	2	Aux I/O PCA	06730XXXX	J2	2
	LED0	CPU PCA	067240000	LAN	3	Aux I/O PCA	06730XXXX	J2	3
	ARX+	CPU PCA	067240000	LAN	4	Aux I/O PCA	06730XXXX	J2	4
	ARX-	CPU PCA	067240000	LAN	5	Aux I/O PCA	06730XXXX	J2	5
	LED0+	CPU PCA	067240000	LAN	6	Aux I/O PCA	06730XXXX	J2	6
	LED1	CPU PCA	067240000	LAN	7	Aux I/O PCA	06730XXXX	J2	7
	LED1+	CPU PCA	067240000	LAN	8	Aux I/O PCA	06730XXXX	J2	8
06741	**CBL, CPU USB TO FRONT PANEL**								
	GND	CPU PCA	067240000	USB	8	LCD Interface PCA	066970000	J9	
	LUSBD3+	CPU PCA	067240000	USB	6	LCD Interface PCA	066970000	J9	
	LUSBD3-	CPU PCA	067240000	USB	4	LCD Interface PCA	066970000	J9	
	VCC	CPU PCA	067240000	USB	2	LCD Interface PCA	066970000	J9	

Interconnect List, T101

(Reference 0736501 Rev01)

		FROM				TO			
Cable PN	**Signal**	**Assembly**	**PN**	**J/P**	**Pin**	**Assembly**	**PN**	**J/P**	**Pin**
06746	**CBL, MB TO 06154 CPU**								
	GND	Motherboard	058021100	P12	2	Shield			
	RX0	Motherboard	058021100	P12	14	CPU PCA	067240000	COM1	1
	RTS0	Motherboard	058021100	P12	13	CPU PCA	067240000	COM1	8
	TX0	Motherboard	058021100	P12	12	CPU PCA	067240000	COM1	4
	CTS0	Motherboard	058021100	P12	11	CPU PCA	067240000	COM1	7
	RS-GND0	Motherboard	058021100	P12	10	CPU PCA	067240000	COM1	6
	RTS1	Motherboard	058021100	P12	8	CPU PCA	067240000	COM2	8
	CTS1/485-	Motherboard	058021100	P12	6	CPU PCA	067240000	COM2	7
	RX1	Motherboard	058021100	P12	9	CPU PCA	067240000	COM2	1
	TX1/485+	Motherboard	058021100	P12	7	CPU PCA	067240000	COM2	4
	RS-GND1	Motherboard	058021100	P12	5	CPU PCA	067240000	COM2	6
	RX1	Motherboard	058021100	P12	9	CPU PCA	067240000	485	1
	TX1/485+	Motherboard	058021100	P12	7	CPU PCA	067240000	485	2
	RS-GND1	Motherboard	058021100	P12	5	CPU PCA	067240000	485	3
06910	**CBL, COOLER FAN**								
	+12V RET	Relay PCA	045230100	P12	7	Cooler Fan	013140000		2
	+12V	Relay PCA	045230100	P12	8	Cooler Fan	013140000		1
WR256	**CBL, XMITTER TO INTERFACE**								
		LCD Interface PCA	066970000	J15		Transmitter PCA	068810000	J1	

REVISIONS				
REV	DESCRIPTION	DATE	DCN	APPROVED
01	Prototype Release	1/6/11		KV

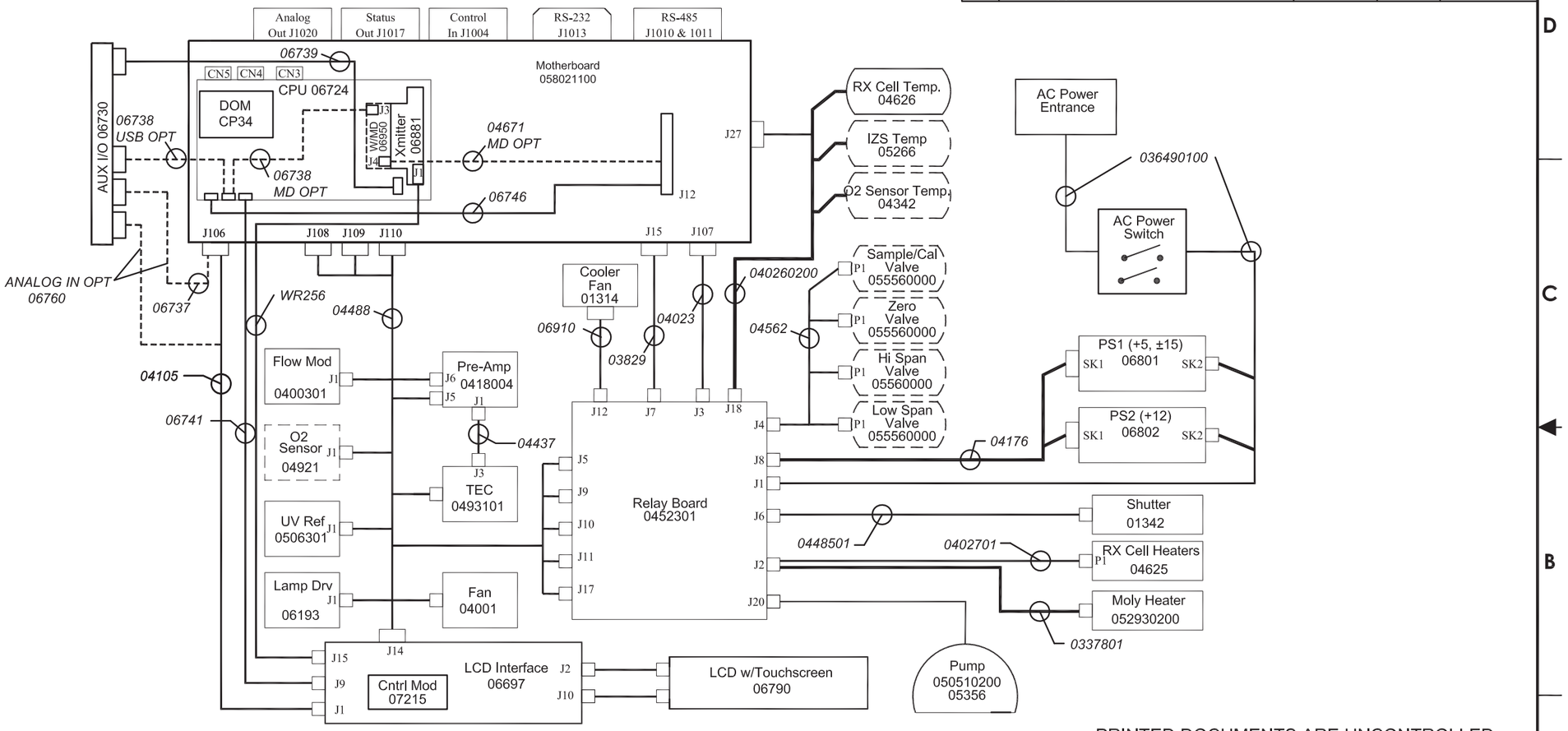

KEY:
1. All part numbers in *Italic* identify cables that are refered to in the accompanying document 073650100.
2. All items in Dashed boxes are optional.

PRINTED DOCUMENTS ARE UNCONTROLLED

The information hereon is the property of API and is submitted in strictest confidence for reference only. Unauthorized use by anyone for any other purposes is prohibited. this document or an information contained in it may not be duplicated without proper authorization.

UNLESS OTHERWISE SPECIFIED DIMENSIONS ARE IN INCHES
TOLERANCES ARE:
FRACTIONS ± 1/32 DECIMALS ±.03[0.76] ±.010[0.25] ANGULAR ±0° 30'
DO NOT SCALE DRAWING
TREATMENT: NA
FINISH
SIMILAR TO
THIRD ANGLE PROJECTION

CONTRACT: NA

APPROVALS	DATE
DRAWN KV	1/11
CHECK	
CCB	
ISSUED	

TELEDYNE
Advanced Pollution Instrumentation
A Teledyne Technologies Company

TITLE: INTERCONNECT DRAWING T101

SIZE	CAGE CODE NO.	DWG. NO.	REV
B	1JZF4	07365	01

SCALE DNS FILE 07365 SHEET 1 OF 1

General Trace Width Requirements
1. Vcc (+5V) and I2C VCC should be 15 mil
2. Digitial grounds should be at least 20 mils
3. +12V and +12V return should be 30 mils
4. All AC lines (AC Line, AC Neutral, RELAY0 - 4, All signals on JP2) should be 30 mils wide, with 120 mil isolation/creepage distance around them
5. Traces between J7 - J12 should be top and bottom and at least 140 mils.
6. Traces to the test points can be as small as 10 mils.

J1 4 PIN — AC_Line, AC_Neutral

VCC

R1 2.2K, R2 2.2K

JP1 HEADER 4X2

RN1 330

I2C_Vcc

RELAY0, RELAY1, RELAY2

K1, K2, K3 — SLD-RLY

JP2 Heater Config Jumper

J216 PIN — COMMON0, LOAD0, TS0, RELAY0, COMMON1, LOAD1, TS1, RELAY1, COMMON2, LOAD2, TS2, RELAY2

TS0, TS1, TS2, AC_Neutral

D1 WDOG, D2 YEL RL0, D3 YEL RL1, D4 YEL RL2, D7 GRN VA0, D8 GRN VA1, D9 GRN VA2, D10 GRN VA3

C1 0.1

U1 PCF8575 — A0, A1, A2, INT, SCL, SDA, Vdd, Vss, P00–P07, P10–P17, IO3–IO15

J3 CON5

U2A, U2B, U2C, U2D, U2E — SN74HC04

VLV_ENAB

Q1 IRF7205

R3 20K, R5 10K, R6 10K

U4 MAX693 — VBATT, VOUT, VCC, GND, BATT_ON, LOW LINE', OSC IN, OSC SEL, RESET, RESET', WDO', CD IN', CD OUT', WDI, PFO', PFI

JP4 WTCDG OVR

D17 RLS4148, R4 1M, C2 0.001, C3 1, C4 10/16, C5 10/16

JP3 HEADER 1X2

U5 UDN2540B(16) — IN 4, IN 3, ENABLE, IN 2, IN 1, OUT4, K, OUT 3, OUT 2, K, OUT 1, VCC, GND

J4 8 PIN — VALVE0, VALVE1, VALVE2, VALVE3

C6 2000/25

TP1 DGND, TP2 +5V, TP3 AGND, TP4 +15V, TP5 -15V, TP6 +12RT, TP7 +12V

U2F

DC PWR IN J5 — DGND, VCC, AGND, +15V, AGND, -15V, +12RET, +12V, EGND, CHS_GND

KEYBRD J7, MTHR BRD J8, SYNC DEMOD J9, SPARE J10, J11, J12 — CON10THROUGH

APPLIES TO PCB 03954

REV	AUTH	DATE	
B	CAC	10/3/02	CE MARK LINE VOLTAGE TRACE SPACING FIX

Title: 100E/ 200E Rela PCB

Size: B | Number: 03956 | Revision: A

Date: 30-Jun-2004 | Sheet 1 of 3

File: N:\PCBMGR\RELEASED\03954c\PROTEL\03954a.ddb | Drawn By:

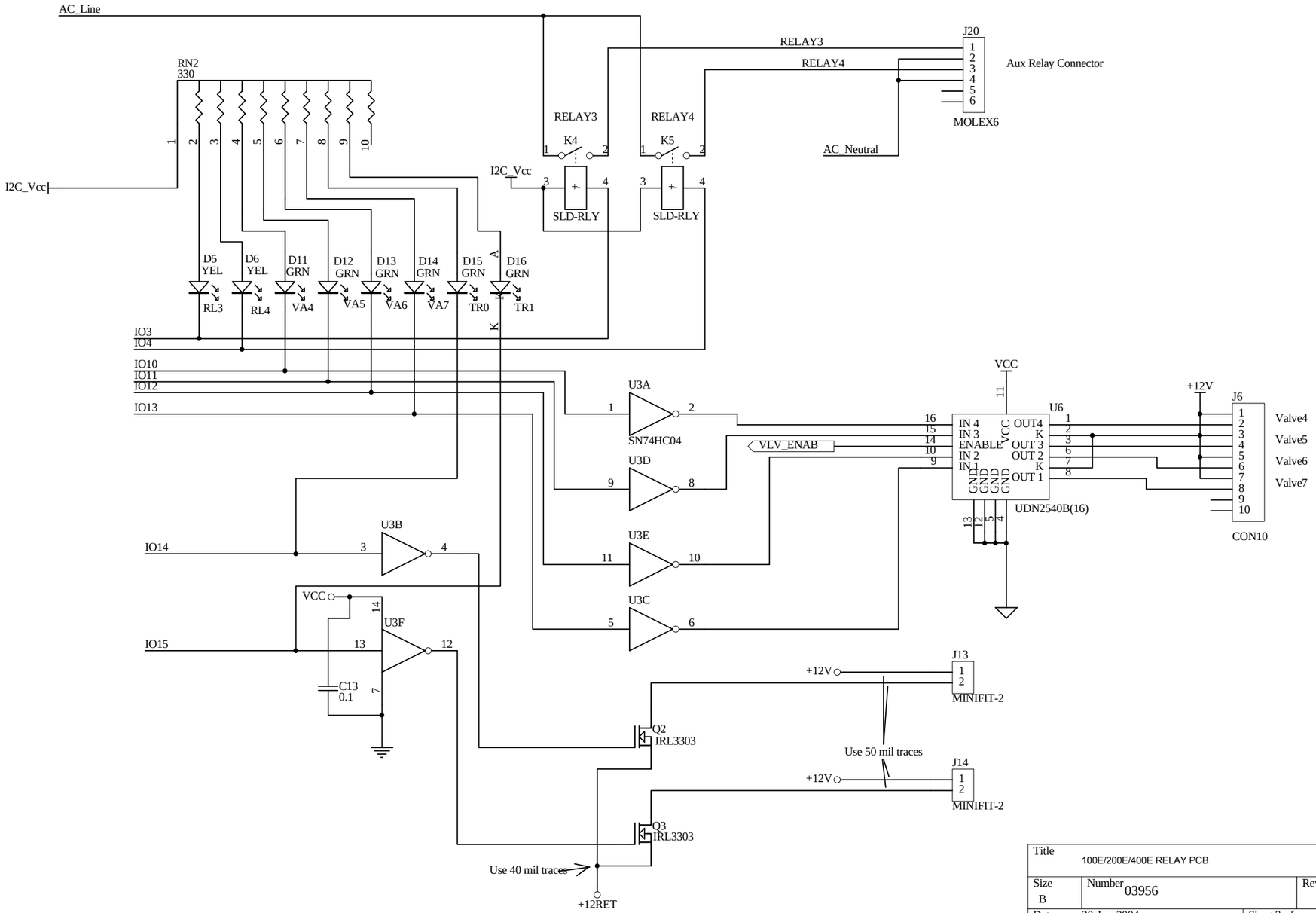
AC_Line
RN2
330
I2C_Vcc
RELAY3
RELAY4
J20
Aux Relay Connector
MOLEX6
AC_Neutral
K4
K5
SLD-RLY
D5 YEL
D6 YEL
D11 GRN
D12 GRN
D13 GRN
D14 GRN
D15 GRN
D16 GRN
RL3
RL4
VA4
VA5
VA6
VA7
TR0
TR1
IO3
IO4
IO10
IO11
IO12
IO13
U3A
SN74HC04
U3D
U3E
U3C
VLV_ENAB
VCC
U6
UDN2540B(16)
+12V
J6
Valve4
Valve5
Valve6
Valve7
CON10
IO14
U3B
IO15
U3F
C13
0.1
J13
MINIFIT-2
J14
Use 50 mil traces
Q2
IRL3303
Q3
IRL3303
Use 40 mil traces
+12RET
Title
100E/200E/400E RELAY PCB
Size
B
Number
03956
Revision
A
Date:
30-Jun-2004
Sheet 2 of 3
File:
N:\PCBMGR\RELEASED\03954cc\PROTEUS\03954a.ddb

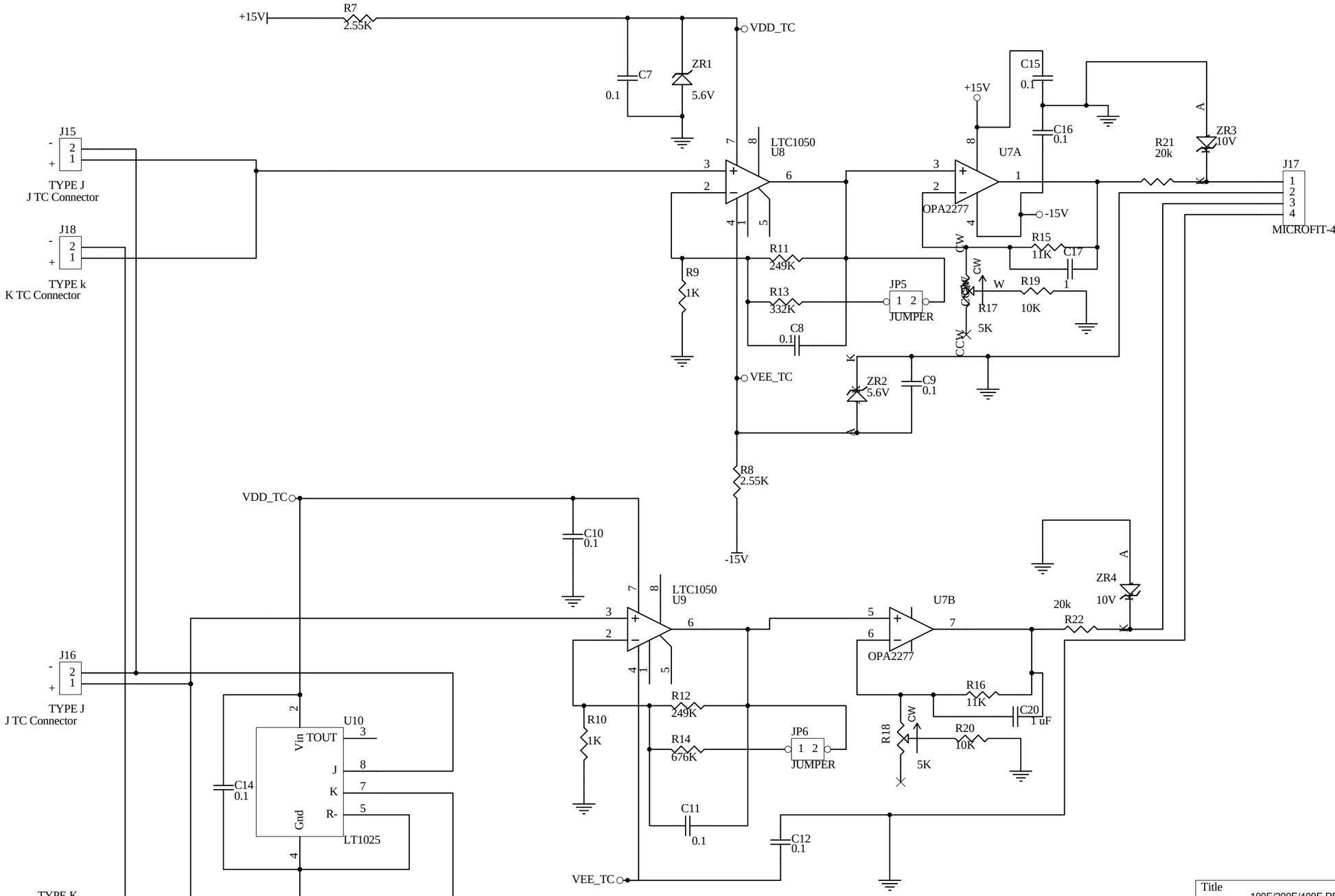
+15V
R7
2.55K
VDD_TC
C7
0.1
ZR1
5.6V
J15
TYPE J
J TC Connector
J18
TYPE k
K TC Connector
LTC1050
U8
R11
249K
R9
1K
R13
332K
JP5
JUMPER
C8
0.1
VEE_TC
ZR2
5.6V
C9
0.1
R8
2.55K
-15V
C15
0.1
C16
0.1
U7A
OPA2277
-15V
R15
11K
C17
R19
10K
R17
5K
R21
20k
ZR3
10V
J17
MICROFIT-4
VDD_TC
C10
0.1
LTC1050
U9
U7B
OPA2277
20k
R22
ZR4
10V
R12
249K
R10
1K
R14
676K
JP6
JUMPER
C11
0.1
C12
0.1
R16
11K
C20
1 uF
R18
R20
10K
5K
VEE_TC
J16
TYPE J
J TC Connector
U10
LT1025
C14
0.1
TYPE K
J19
K TC Connector
Title
100E/200E/400E RELAY PAB
Size
B
Number
03956
Revision
A
Date:
30-Jun-2004
Sheet 3 of 3
File:
N:\PCBMGR\RELEASED\03954cc\PROTEL\03954a.ddb
Drawn By:

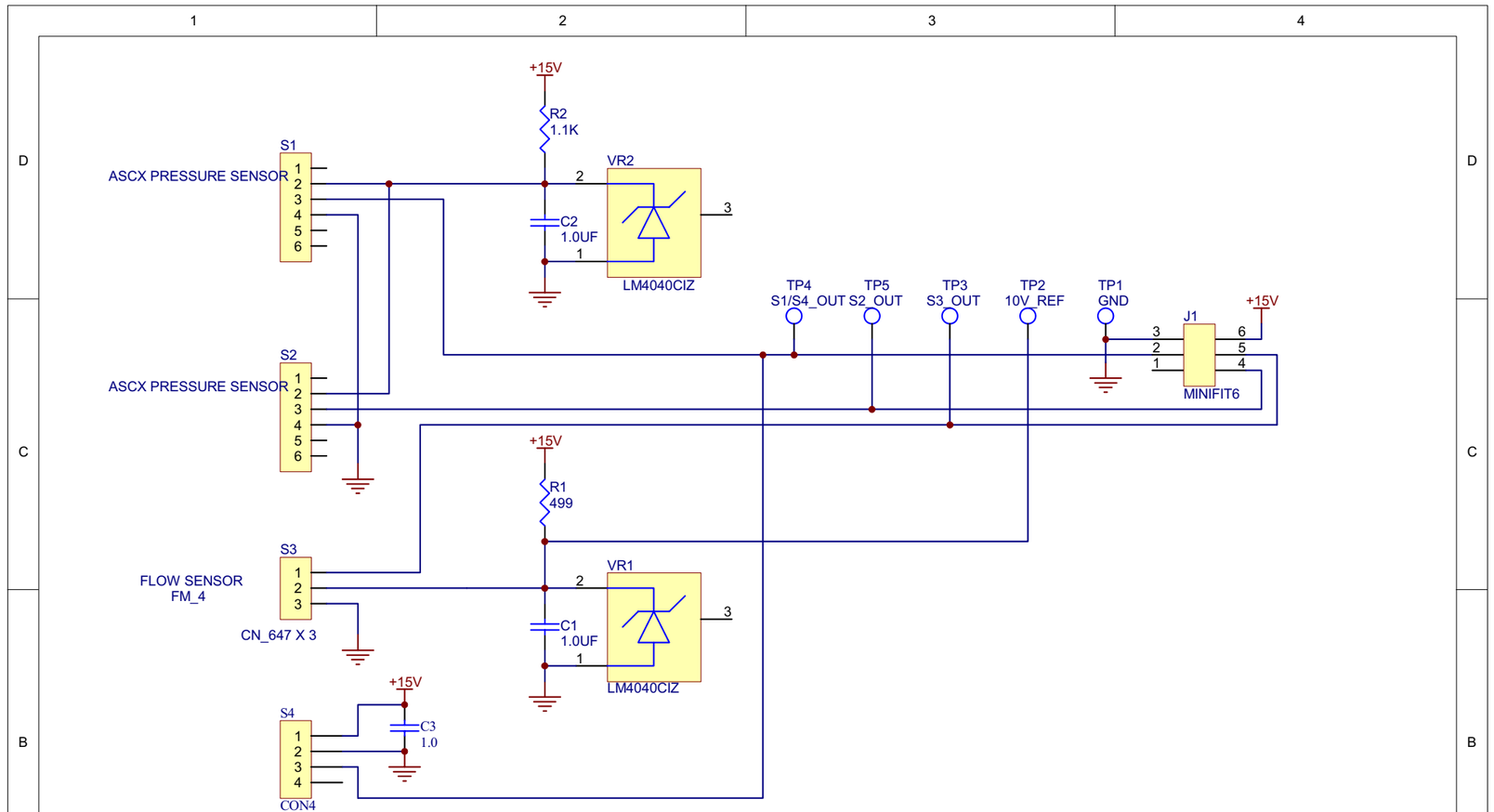

TELEDYNE
INSTRUMENTS
Advanced Pollution Instrumentation

The information herein is the property of API and is submitted in strictest confidence for reference only. Unauthorized use by anyone for any other purposes is prohibited. This document or any information contained in it may not be duplicated without proper authorization.

APPROVALS	DATE
DRAWN	
CHECKED	
APPROVED	

SCH, PCA 04003, PRESS/FLOW, 'E' SERIES

SIZE	DRAWING NO.	REVISION
B	04354	D

LAST MOD.	SHEET
3-Dec-2007	1 of 1

Interconnections
04181H-1-m100e200e.sch

preamp cktry
04181H-2-m100e200e.SCH

HVPS Cktry
04181H-3-m100e200e.SCH

Title	M100E/200E PMT Preamp PCA	
Size: B	Number: 04181	Revision: H
Date: 10-May-2007	Sheet 0 of 3	
File: N:\PCBMGR\04179cc\Source\RevG\04179cdd	Drawn By:	

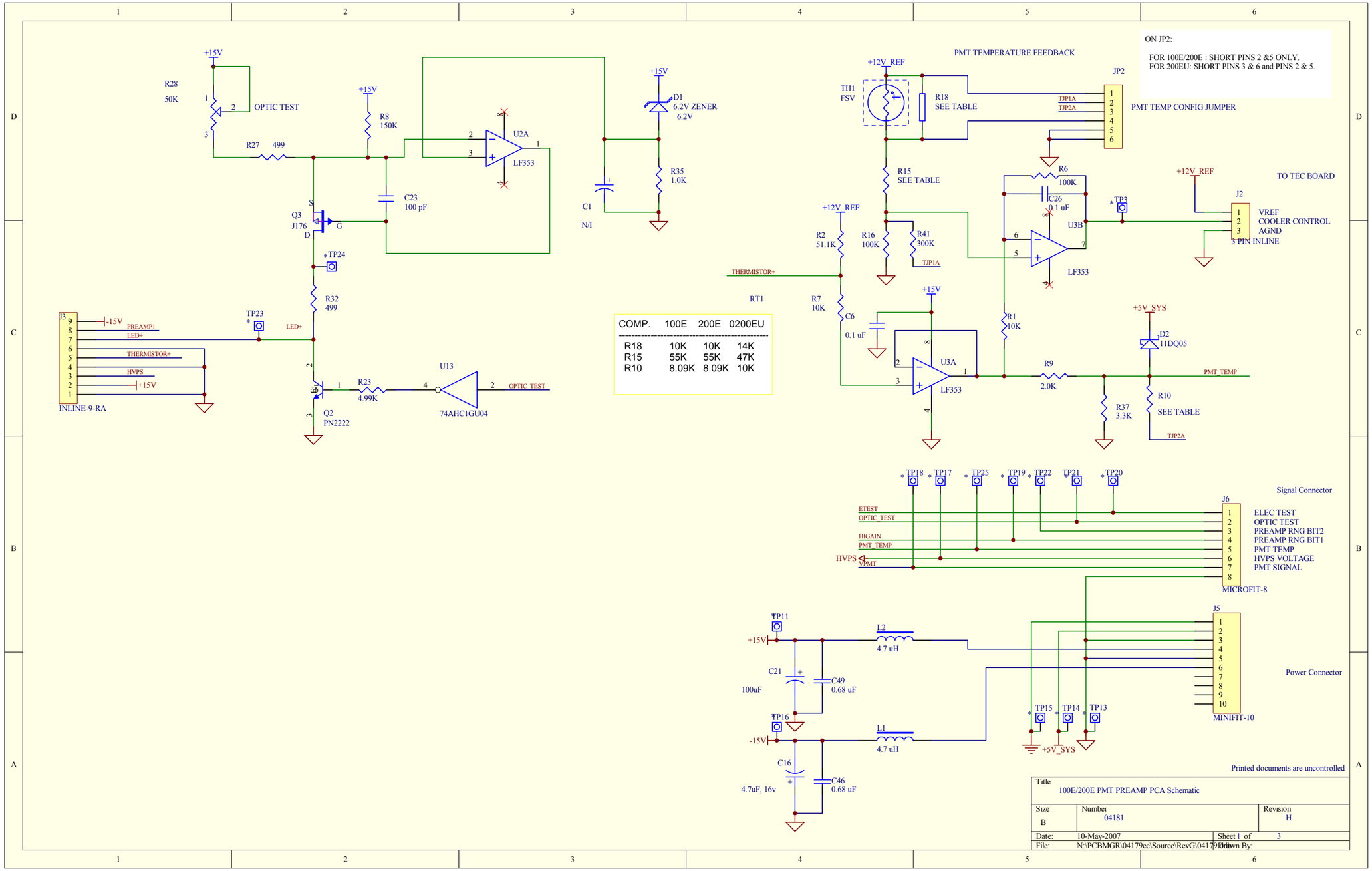
+15V
R28
50K
OPTIC TEST
R27 499
R8
150K
C23
100 pF
U2A
LF353
Q3
J176
D
G
S
*TP24
R32
499
TP23
LED+
J3
-15V
PREAMP1
LED+
THERMISTOR+
HVPS
+15V
INLINE-9-RA
R23
4.99K
Q2
PN2222
U13
74AHC1GU04
OPTIC_TEST
D1
6.2V ZENER
6.2V
C1
N/I
R35
1.0K
COMP. 100E 200E 0200EU
R18 10K 10K 14K
R15 55K 55K 47K
R10 8.09K 8.09K 10K
PMT TEMPERATURE FEEDBACK
+12V_REF
THI
FSV
R18
SEE TABLE
JP2
TJP1A
TJP2A
PMT TEMP CONFIG JUMPER
ON JP2:
FOR 100E/200E : SHORT PINS 2 &5 ONLY.
FOR 200EU: SHORT PINS 3 & 6 and PINS 2 & 5.
R15
SEE TABLE
R6
100K
C26
0.1 uF
U3B
LF353
*TP3
+12V_REF
J2
TO TEC BOARD
VREF
COOLER CONTROL
AGND
3 PIN INLINE
R2
51.1K
R16
100K
R41
300K
THERMISTOR+
RT1
R7
10K
C6
0.1 uF
U3A
LF353
R1
10K
R9
2.0K
+5V_SYS
D2
11DQ05
PMT_TEMP
R37
3.3K
R10
SEE TABLE
TP18 TP17 TP25 TP19 TP22 TP21 TP20
Signal Connector
J6
ETEST
OPTIC_TEST
HIGAIN
PMT_TEMP
HVPS
VPMT
ELEC TEST
OPTIC TEST
PREAMP RNG BIT2
PREAMP RNG BIT1
PMT TEMP
HVPS VOLTAGE
PMT SIGNAL
MICROFIT-8
TP11
+15V
L2
4.7 uH
C21
100uF
C49
0.68 uF
TP16
-15V
L1
4.7 uH
C16
4.7uF, 16v
C46
0.68 uF
J5
Power Connector
MINIFIT-10
TP15 TP14 TP13
+5V_SYS
Printed documents are uncontrolled
Title
100E/200E PMT PREAMP PCA Schematic
Size
B
Number
04181
Revision
H
Date: 10-May-2007
Sheet 1 of 3
File: N:\PCBMGR\04179cc\Source\RevG\04179cc.ddb
Drawn By:

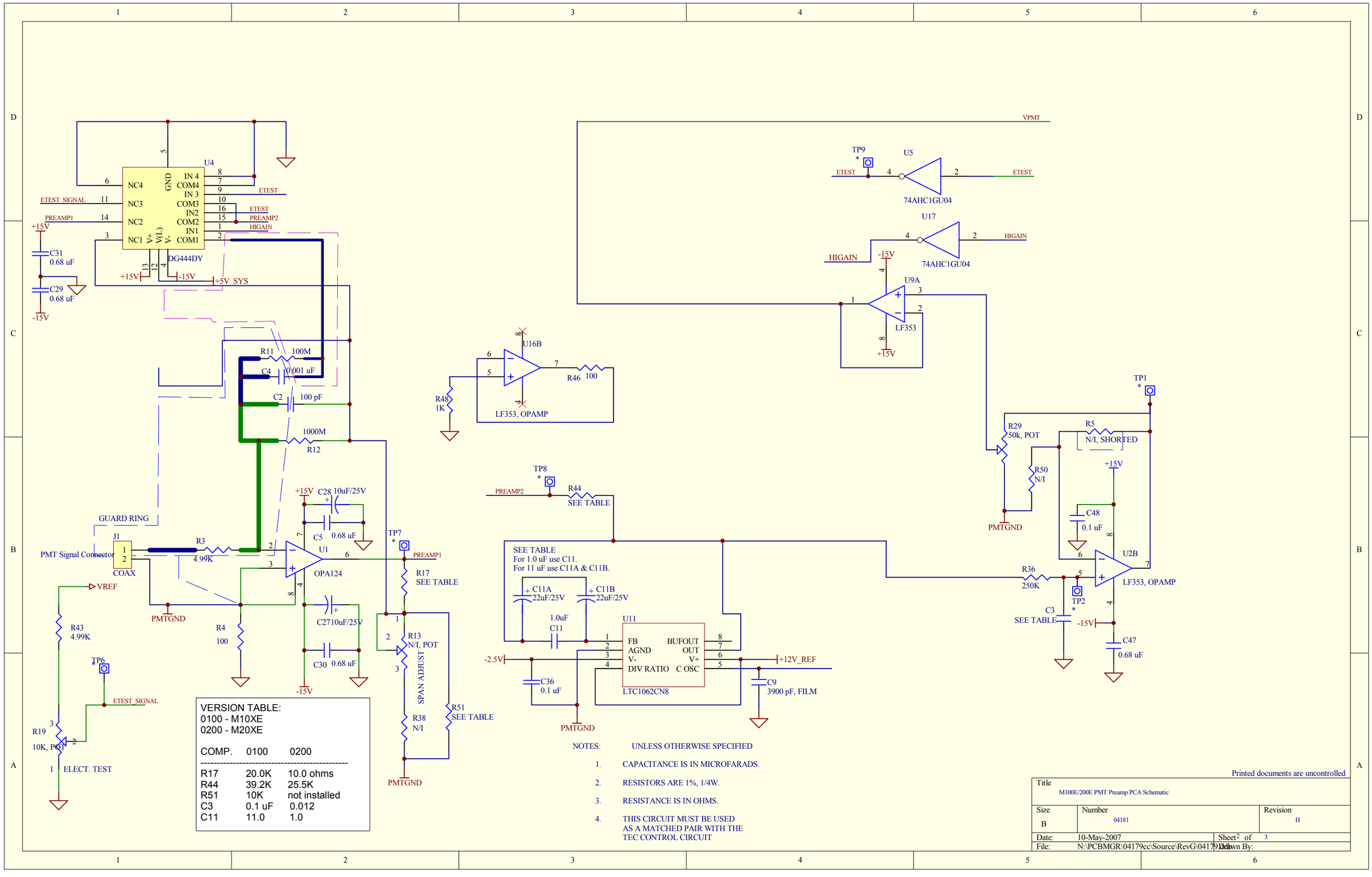
U4
NC4
NC3
NC2
NC1
GND
V+
V(L)
V-
IN 4
COM4
IN 3
COM3
IN2
COM2
IN1
COM1
DG444DY
ETEST_SIGNAL
PREAMP1
+15V
-15V
+5V_SYS
ETEST
PREAMP2
HIGAIN
C31
0.68 uF
C29
0.68 uF
R11
100M
C4
0.001 uF
C2
100 pF
1000M
R12
GUARD RING
J1
PMT Signal Connector
COAX
R3
4.99K
U1
OPA124
VREF
PMTGND
R43
4.99K
R4
100
C28
10uF/25V
C5
0.68 uF
C2710uF/25V
C30
0.68 uF
TP7
R17
SEE TABLE
R13
N/I, POT
SPAN ADJUST
R38
N/I
R51
SEE TABLE
TP6
ETEST_SIGNAL
R19
10K, POT
ELECT. TEST
VERSION TABLE:
0100 - M10XE
0200 - M20XE
COMP. 0100 0200
R17 20.0K 10.0 ohms
R44 39.2K 25.5K
R51 10K not installed
C3 0.1 uF 0.012
C11 11.0 1.0
U16B
R48
1K
R46
100
LF353, OPAMP
TP8
PREAMP2
R44
SEE TABLE
SEE TABLE
For 1.0 uF use C11.
For 11 uF use C11A & C11B.
C11A
22uF/25V
C11B
22uF/25V
1.0uF
C11
U11
FB
AGND
V-
DIV RATIO
BUFOUT
OUT
V+
C OSC
LTC1062CN8
-2.5V
+12V_REF
C36
0.1 uF
C9
3900 pF, FILM
VPMT
TP9
U5
ETEST
74AHC1GU04
U17
HIGAIN
74AHC1GU04
U9A
LF353
TP1
R29
50k, POT
R5
N/I, SHORTED
R50
N/I
C48
0.1 uF
U2B
LF353, OPAMP
R36
250K
TP2
C3
SEE TABLE
C47
0.68 uF
NOTES: UNLESS OTHERWISE SPECIFIED
1. CAPACITANCE IS IN MICROFARADS.
2. RESISTORS ARE 1%, 1/4W.
3. RESISTANCE IS IN OHMS.
4. THIS CIRCUIT MUST BE USED AS A MATCHED PAIR WITH THE TEC CONTROL CIRCUIT
Printed documents are uncontrolled
Title
M100E/200E PMT Preamp PCA Schematic
Size
B
Number
04181
Revision
H
Date: 10-May-2007
Sheet 2 of 3
File: N:\PCBMGR\04179cc\Source\RevG\04179-Drawn By:

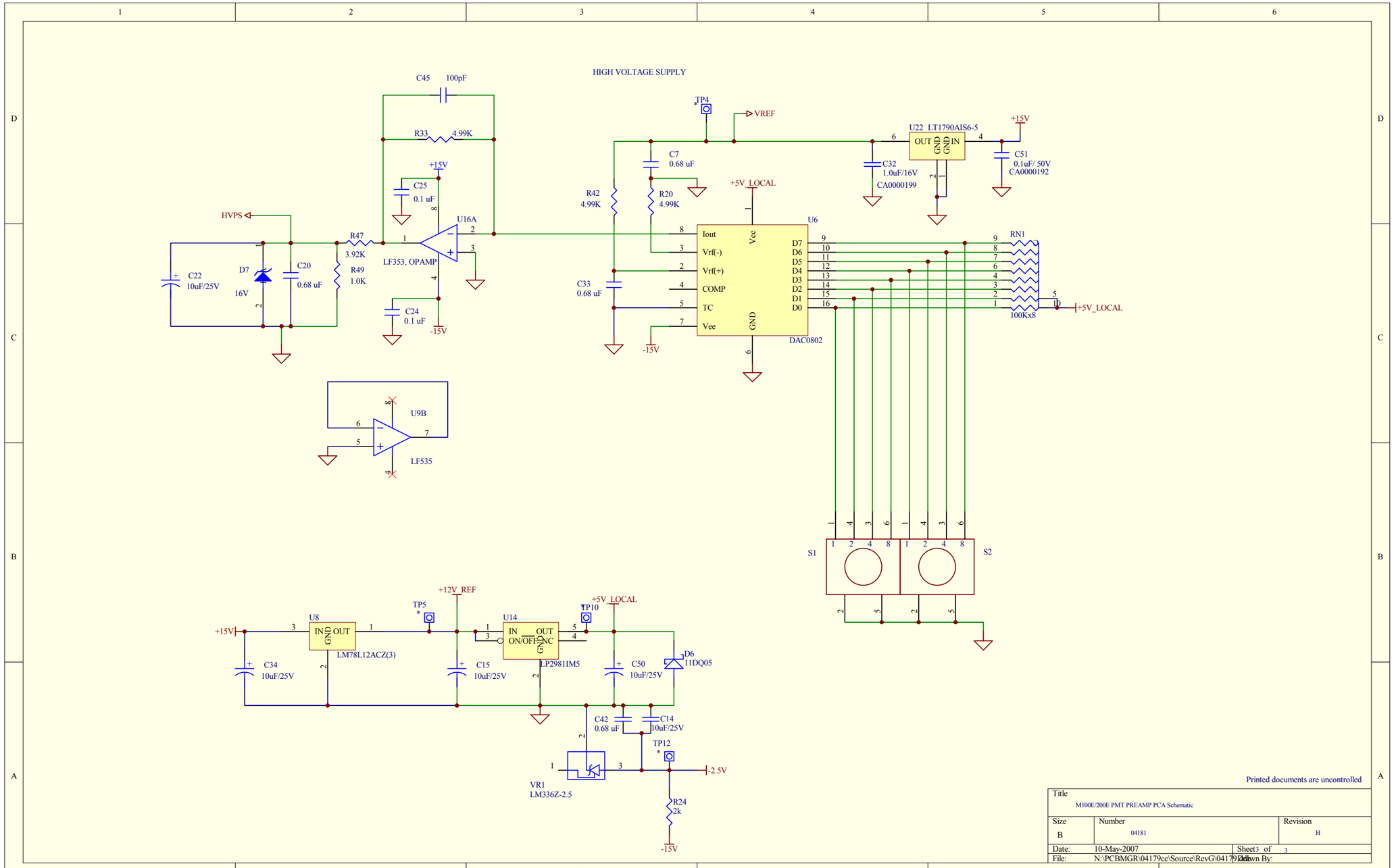
HIGH VOLTAGE SUPPLY
C45 100pF
R33 4.99K
+15V
C25 0.1 uF
HVPS
U16A
R47 3.92K
LF353, OPAMP
C22 10uF/25V
D7 16V
C20 0.68 uF
R49 1.0K
C24 0.1 uF
-15V
U9B
LF535
TP4
VREF
C7 0.68 uF
+5V_LOCAL
R42 4.99K
R20 4.99K
U6
Iout
Vrf(-)
Vrf(+)
COMP
TC
Vee
Vcc
GND
DAC0802
C33 0.68 uF
-15V
U22 LT1790AIS6-5
OUT GND GND IN
C32 1.0uF/16V CA0000199
C51 0.1uF/ 50V CA0000192
+15V
RN1
100Kx8
+5V_LOCAL
S1
S2
+12V_REF
TP5
U8
IN GND OUT
LM78L12ACZ(3)
C34 10uF/25V
C15 10uF/25V
U14
IN ON/OFF OUT GND NC
LP2981IM5
TP10
+5V_LOCAL
C50 10uF/25V
D6 11DQ05
C42 0.68 uF
C14 10uF/25V
TP12
VR1 LM336Z-2.5
-2.5V
R24 2k
-15V
Printed documents are uncontrolled
Title
M100E/200E PMT PREAMP PCA Schematic
Size B
Number 04181
Revision H
Date: 10-May-2007
Sheet 3 of 3
File: N:\PCBMGR\04179cc\Source\RevG\04179dd.ddb
Drawn By:

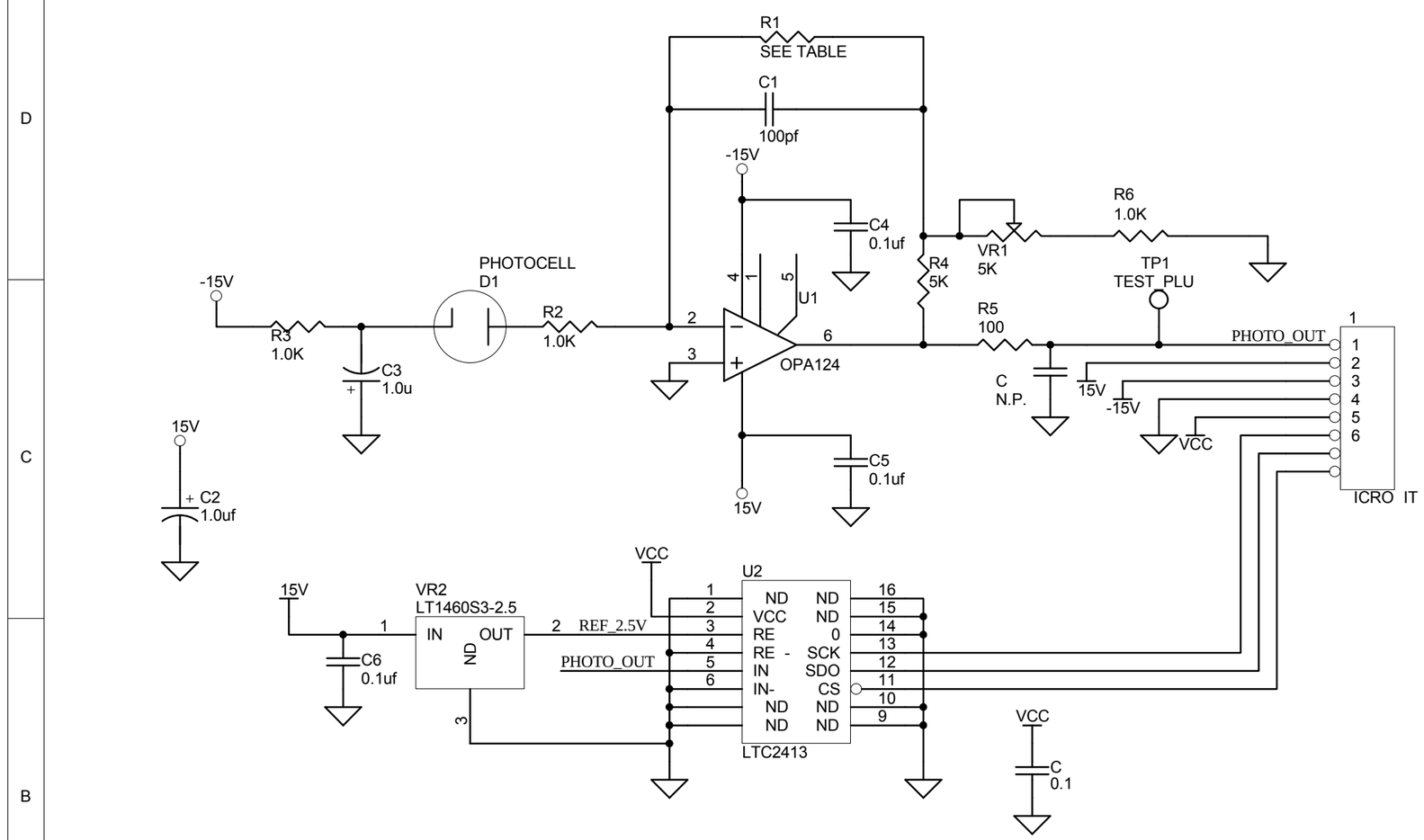

PCA VERSION TABLE

PCA	R1
04120-0000	4.99
04120-0200	2.0

The information herein is the property of API and is submitted in strictest confidence for reference only. Unauthorized use by anyone for any other purposes is prohibited. This document or any information contained in it may not be duplicated without proper authorization.

TELEDYNE
INSTRUMENTS
Advanced Pollution Instrumentation

APPROVALS	DATE
DRAWN	
CHECKED	
APPROVED	

PCA, UV DETECTOR PREAMP

USA

SIZE	DRAWING NO.	REVISION
A	**04420**	**B**

LAST MOD.	SHEET
3-Aug-2004	1 of 1

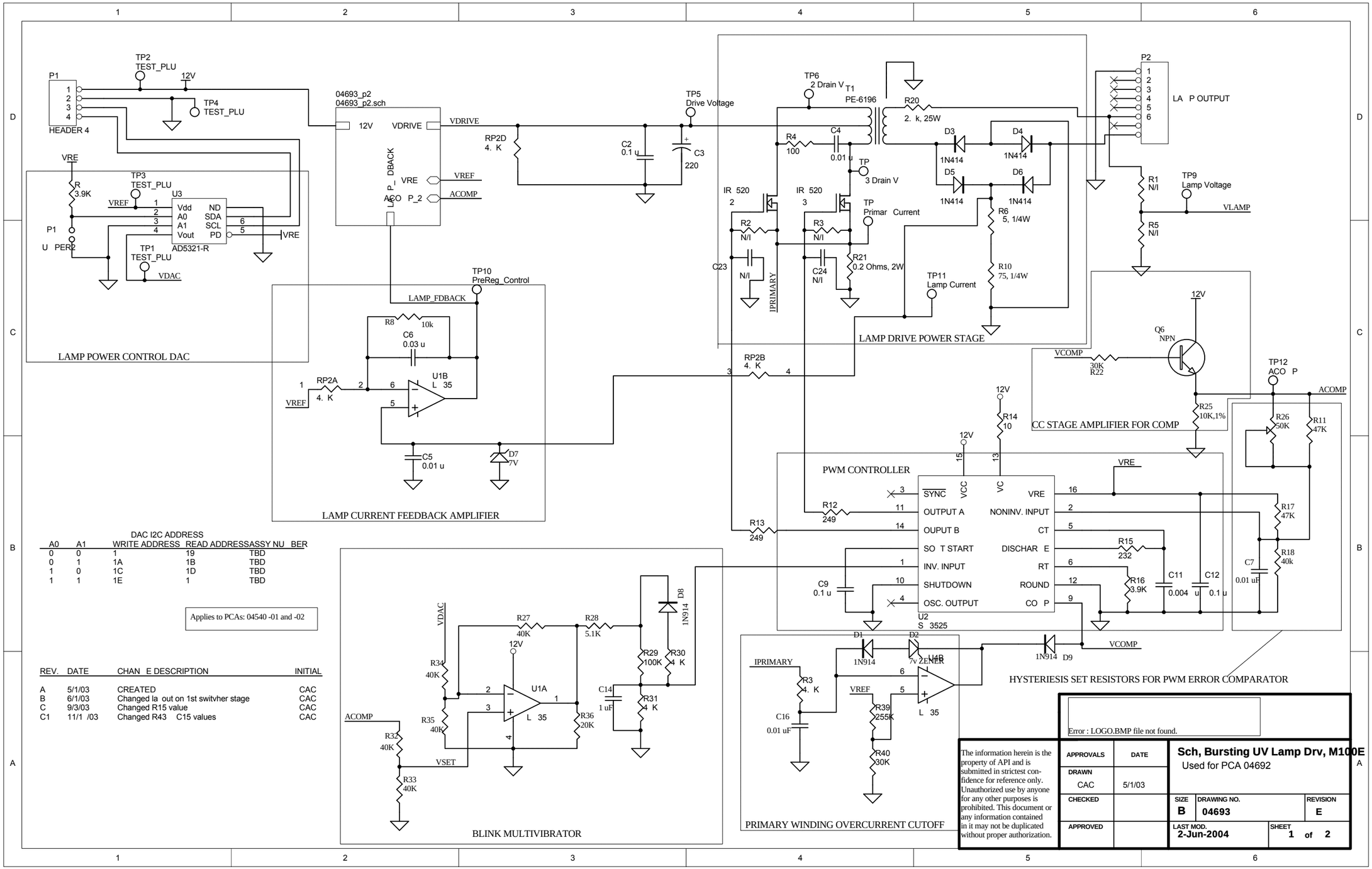

DAC I2C ADDRESS

A0	A1	WRITE ADDRESS	READ ADDRESS	ASSY NU BER
0	0	1	19	TBD
0	1	1A	1B	TBD
1	0	1C	1D	TBD
1	1	1E	1	TBD

Applies to PCAs: 04540 -01 and -02

REV.	DATE	CHAN E DESCRIPTION	INITIAL
A	5/1/03	CREATED	CAC
B	6/1/03	Changed la out on 1st switvher stage	CAC
C	9/3/03	Changed R15 value	CAC
C1	11/1 /03	Changed R43 C15 values	CAC

Error : LOGO.BMP file not found.

The information herein is the property of API and is submitted in strictest confidence for reference only. Unauthorized use by anyone for any other purposes is prohibited. This document or any information contained in it may not be duplicated without proper authorization.

APPROVALS	DATE
DRAWN CAC	5/1/03
CHECKED	
APPROVED	

Sch, Bursting UV Lamp Drv, M100E
Used for PCA 04692

SIZE	DRAWING NO.	REVISION
B	04693	E

LAST MOD. 2-Jun-2004 SHEET 1 of 2

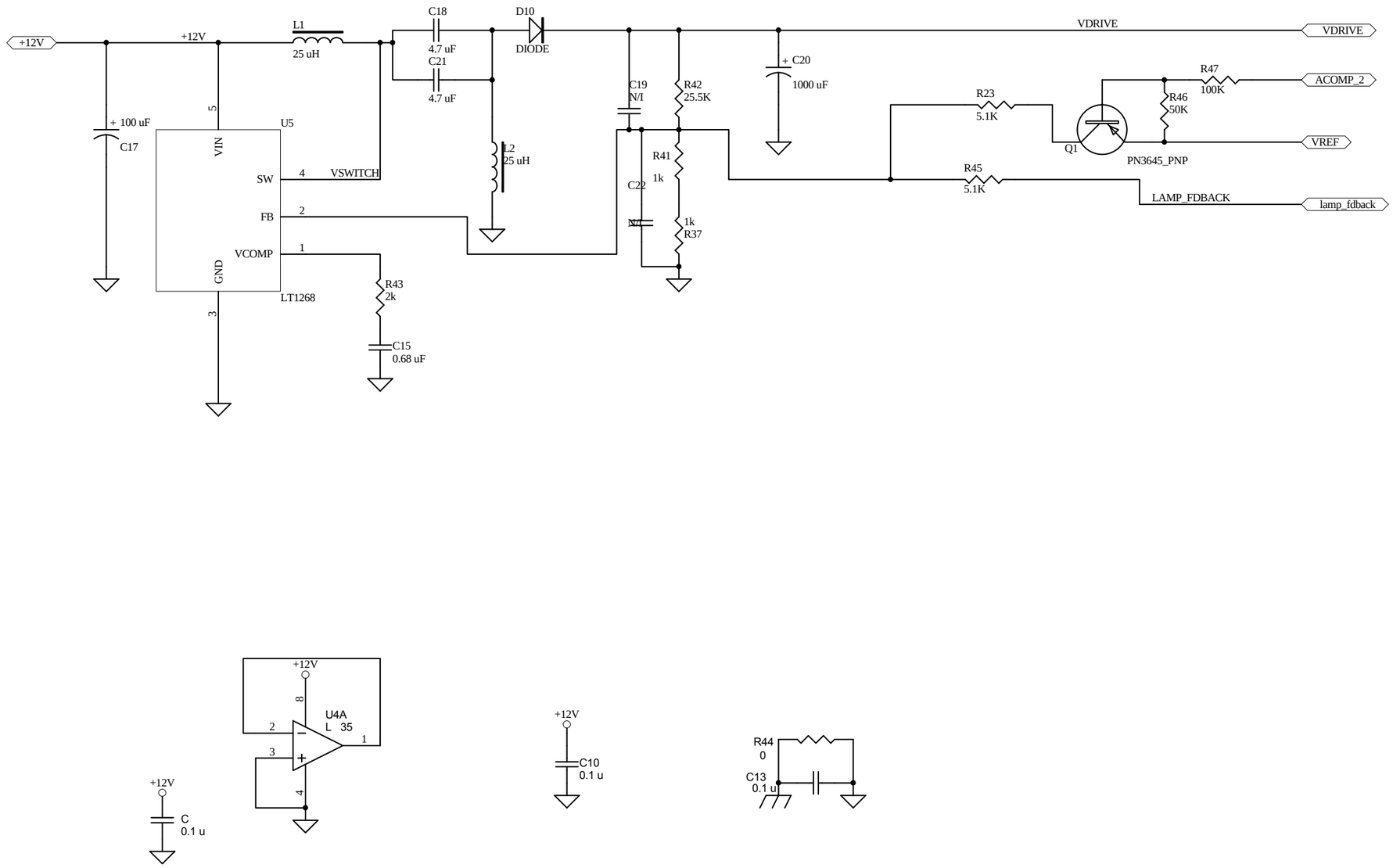

Title	Sch, Bursting UV Lamp Drv, 100E		
Size B	Number 04693		Revision E
Date:	2-Jun-2004	Sheet 2 of 2	
File:	N:\PCBMGR\RELEASED\04691CC\source\04693.pdb		

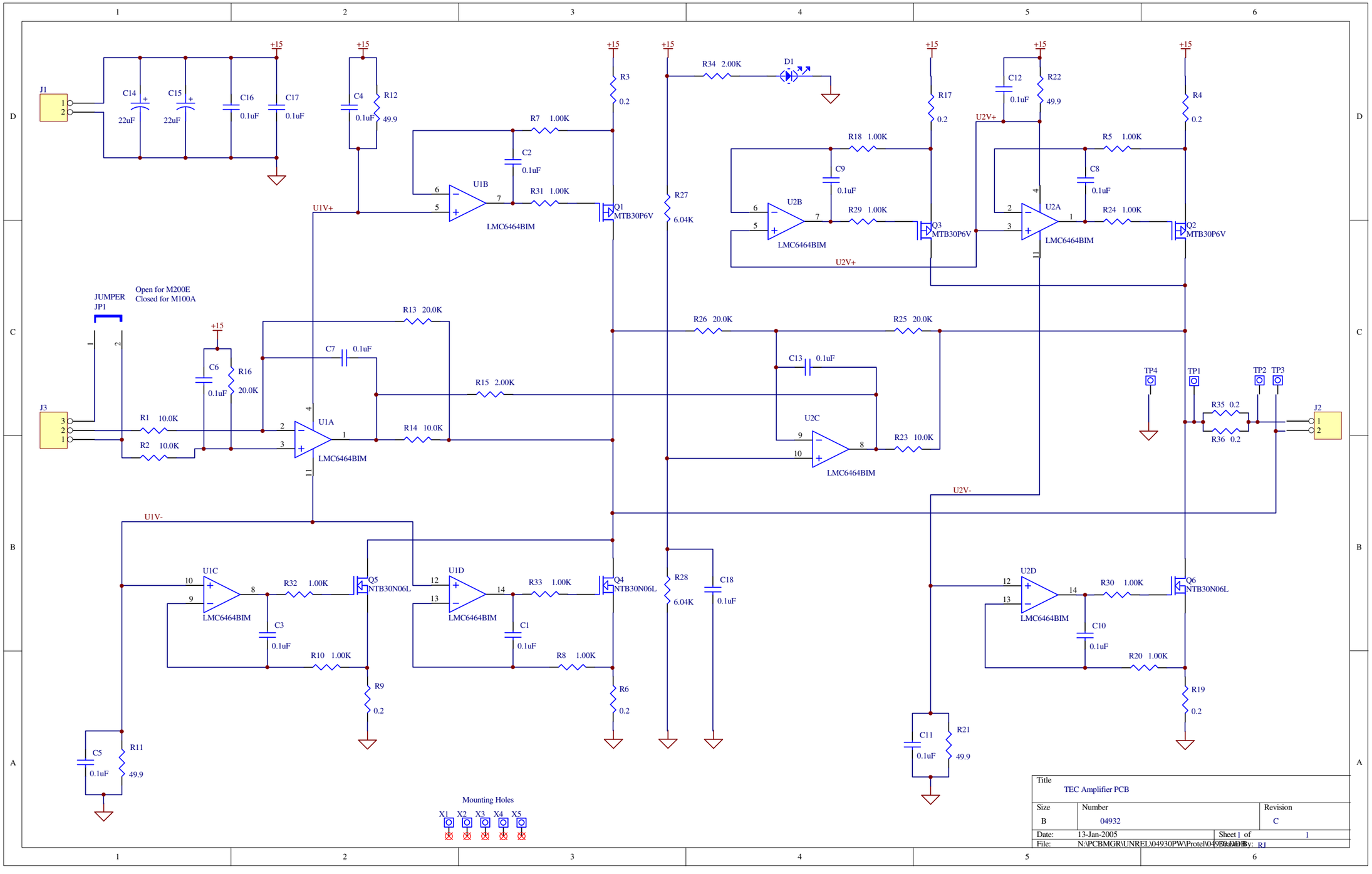
J1
C14 22uF
C15 22uF
C16 0.1uF
C17 0.1uF
+15
C4 0.1uF
R12 49.9
R3 0.2
R7 1.00K
C2 0.1uF
U1B
R31 1.00K
Q1 MTB30P6V
LMC6464BIM
U1V+
R27 6.04K
R34 2.00K
D1
R17 0.2
R18 1.00K
C9 0.1uF
U2B
R29 1.00K
Q3 MTB30P6V
U2V+
C12 0.1uF
R22 49.9
R5 1.00K
C8 0.1uF
U2A
R24 1.00K
Q2 MTB30P6V
R4 0.2
JUMPER
JP1
Open for M200E
Closed for M100A
J3
R1 10.0K
R2 10.0K
C6 0.1uF
R16 20.0K
U1A
R13 20.0K
C7 0.1uF
R15 2.00K
R14 10.0K
R26 20.0K
R25 20.0K
C13 0.1uF
U2C
R23 10.0K
TP4
TP1
TP2
TP3
R35 0.2
R36 0.2
J2
U1V-
U2V-
U1C
R32 1.00K
Q5 NTB30N06L
C3 0.1uF
R10 1.00K
R9 0.2
U1D
R33 1.00K
Q4 NTB30N06L
C1 0.1uF
R8 1.00K
R6 0.2
R28 6.04K
C18 0.1uF
U2D
R30 1.00K
Q6 NTB30N06L
C10 0.1uF
R20 1.00K
R19 0.2
C5 0.1uF
R11 49.9
C11 0.1uF
R21 49.9
Mounting Holes
X1 X2 X3 X4 X5
Title
TEC Amplifier PCB
Size
B
Number
04932
Revision
C
Date: 13-Jan-2005
Sheet 1 of 1
File: N:\PCBMGR\UNREL\04930PW\Protel\04930A01.DDB
Drawn By: RI

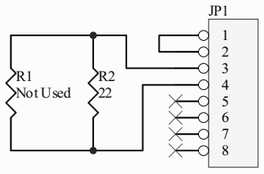

Title	SCH, E-Series Analog Output Isolator, PCA 04467	
Size: A	Number: 04468	Revision: B
Date: 6/28/2004		Sheet of
File: N:\PCBMGR\..\04468B.sch		Drawn By:

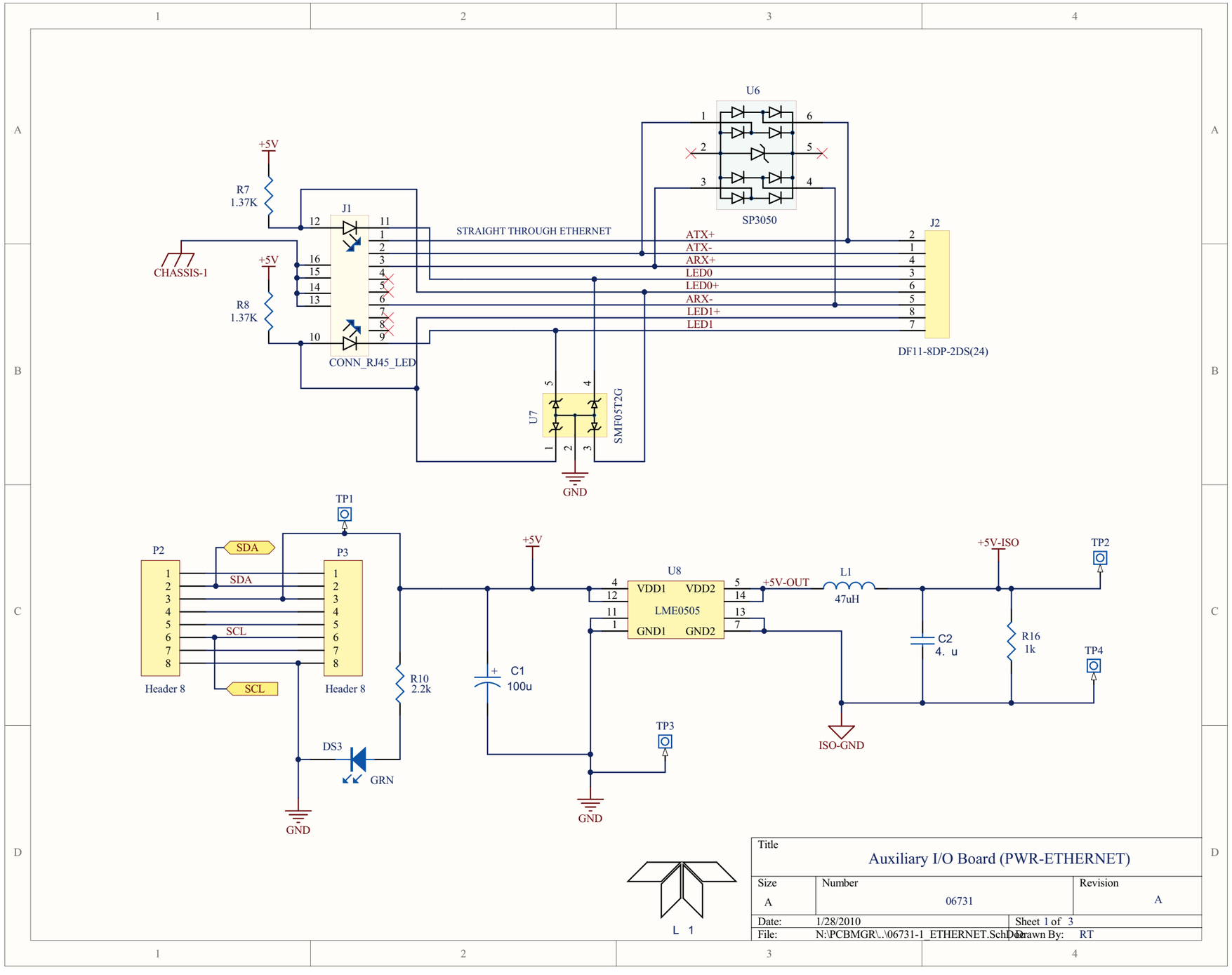
U6
SP3050
J1
CONN_RJ45_LED
STRAIGHT THROUGH ETHERNET
ATX+
ATX-
ARX+
LED0
LED0+
ARX-
LED1+
LED1
J2
DF11-8DP-2DS(24)
+5V
R7
1.37K
R8
1.37K
CHASSIS-1
U7
SMF05T2G
GND
TP1
P2
P3
SDA
SCL
Header 8
R10
2.2k
C1
100u
U8
LME0505
VDD1
VDD2
GND1
GND2
+5V-OUT
L1
47uH
+5V-ISO
TP2
C2
4. u
R16
1k
TP4
TP3
ISO-GND
DS3
GRN
L 1
Title
Auxiliary I/O Board (PWR-ETHERNET)
Size
A
Number
06731
Revision
A
Date: 1/28/2010
Sheet 1 of 3
File: N:\PCBMGR\..\06731-1_ETHERNET.SchDoc
Drawn By: RT

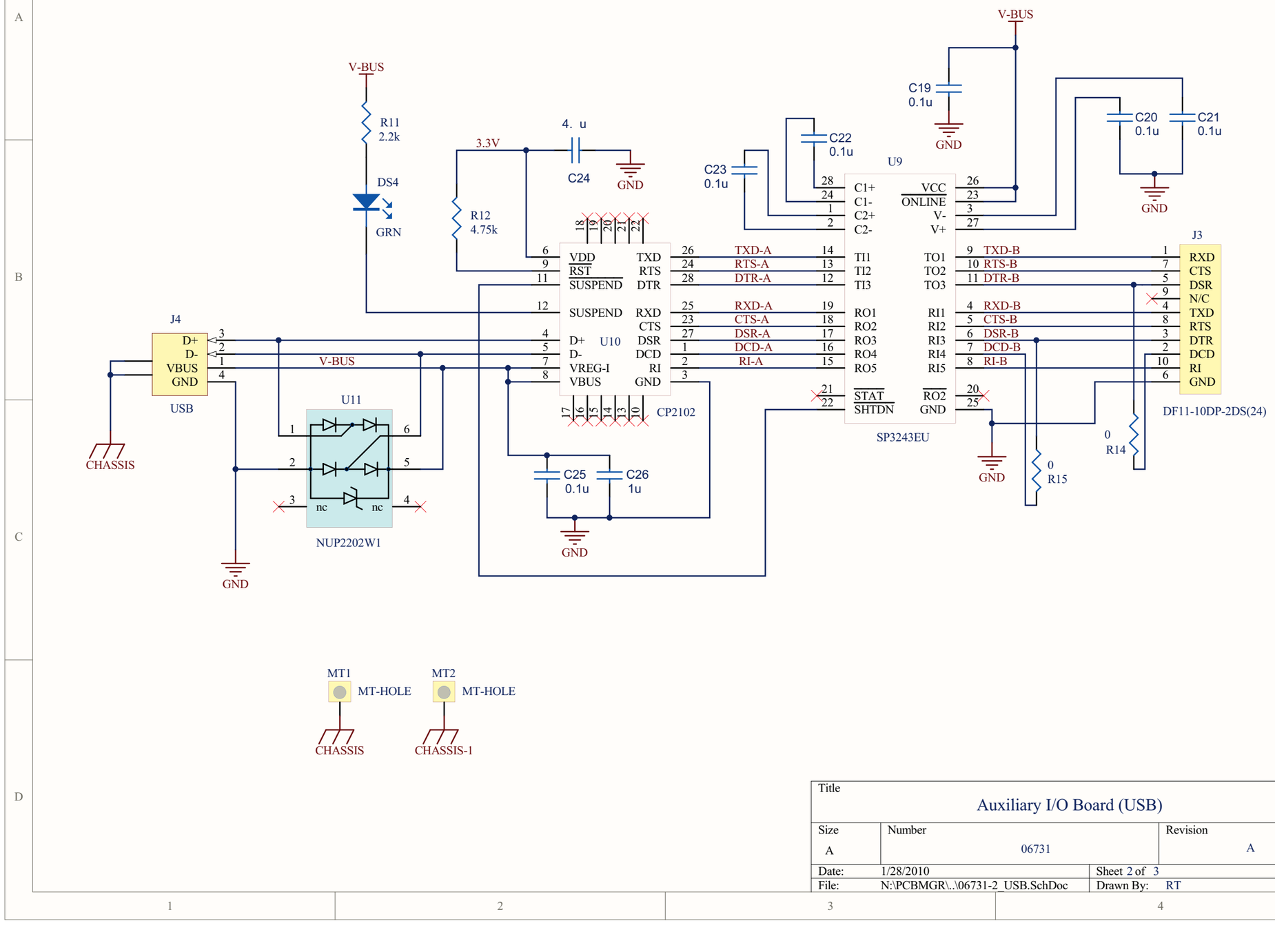

Title	Auxiliary I/O Board (USB)
Size: A	Number: 06731
Revision: A	
Date: 1/28/2010	Sheet 2 of 3
File: N:\PCBMGR\..\06731-2_USB.SchDoc	Drawn By: RT

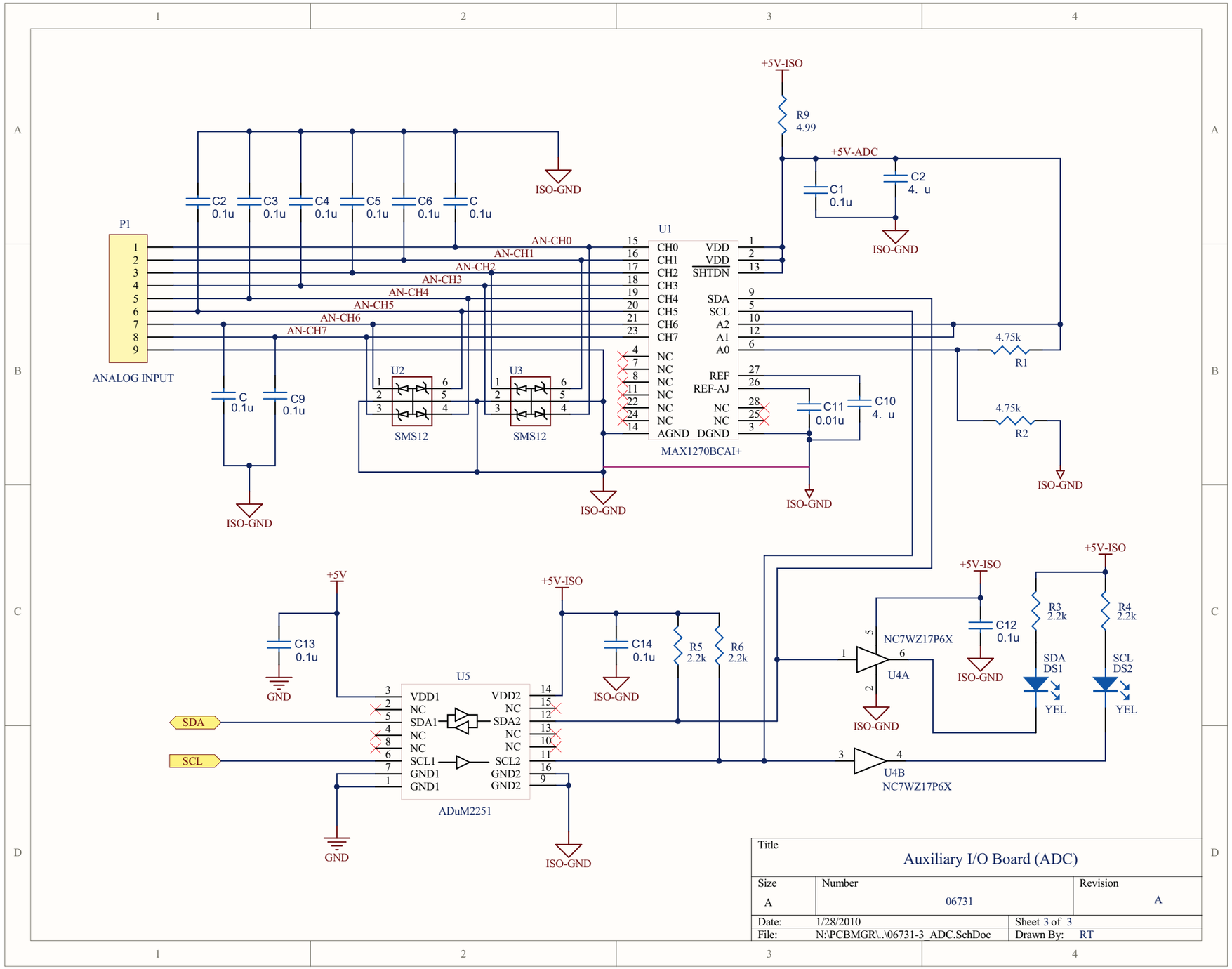
+5V-ISO
R9
4.99
+5V-ADC
C1
0.1u
C2
4. u
ISO-GND
C2
0.1u
C3
0.1u
C4
0.1u
C5
0.1u
C6
0.1u
C
0.1u
P1
ANALOG INPUT
AN-CH0
AN-CH1
AN-CH2
AN-CH3
AN-CH4
AN-CH5
AN-CH6
AN-CH7
U1
CH0
CH1
CH2
CH3
CH4
CH5
CH6
CH7
NC
VDD
VDD
SHTDN
SDA
SCL
A2
A1
A0
REF
REF-AJ
AGND
DGND
MAX1270BCAI+
4.75k
R1
4.75k
R2
C11
0.01u
C10
4. u
U2
U3
SMS12
SMS12
C
0.1u
C9
0.1u
ISO-GND
ISO-GND
ISO-GND
+5V
+5V-ISO
C13
0.1u
C14
0.1u
R5
2.2k
R6
2.2k
U5
VDD1
NC
SDA1
NC
NC
SCL1
GND1
GND1
VDD2
NC
SDA2
NC
NC
SCL2
GND2
GND2
ADuM2251
SDA
SCL
GND
ISO-GND
NC7WZ17P6X
U4A
U4B
NC7WZ17P6X
+5V-ISO
C12
0.1u
ISO-GND
+5V-ISO
R3
2.2k
R4
2.2k
SDA
DS1
SCL
DS2
YEL
YEL
Title
Auxiliary I/O Board (ADC)
Size
A
Number
06731
Revision
A
Date:
1/28/2010
Sheet 3 of 3
File:
N:\PCBMGR\..\06731-3_ADC.SchDoc
Drawn By:
RT

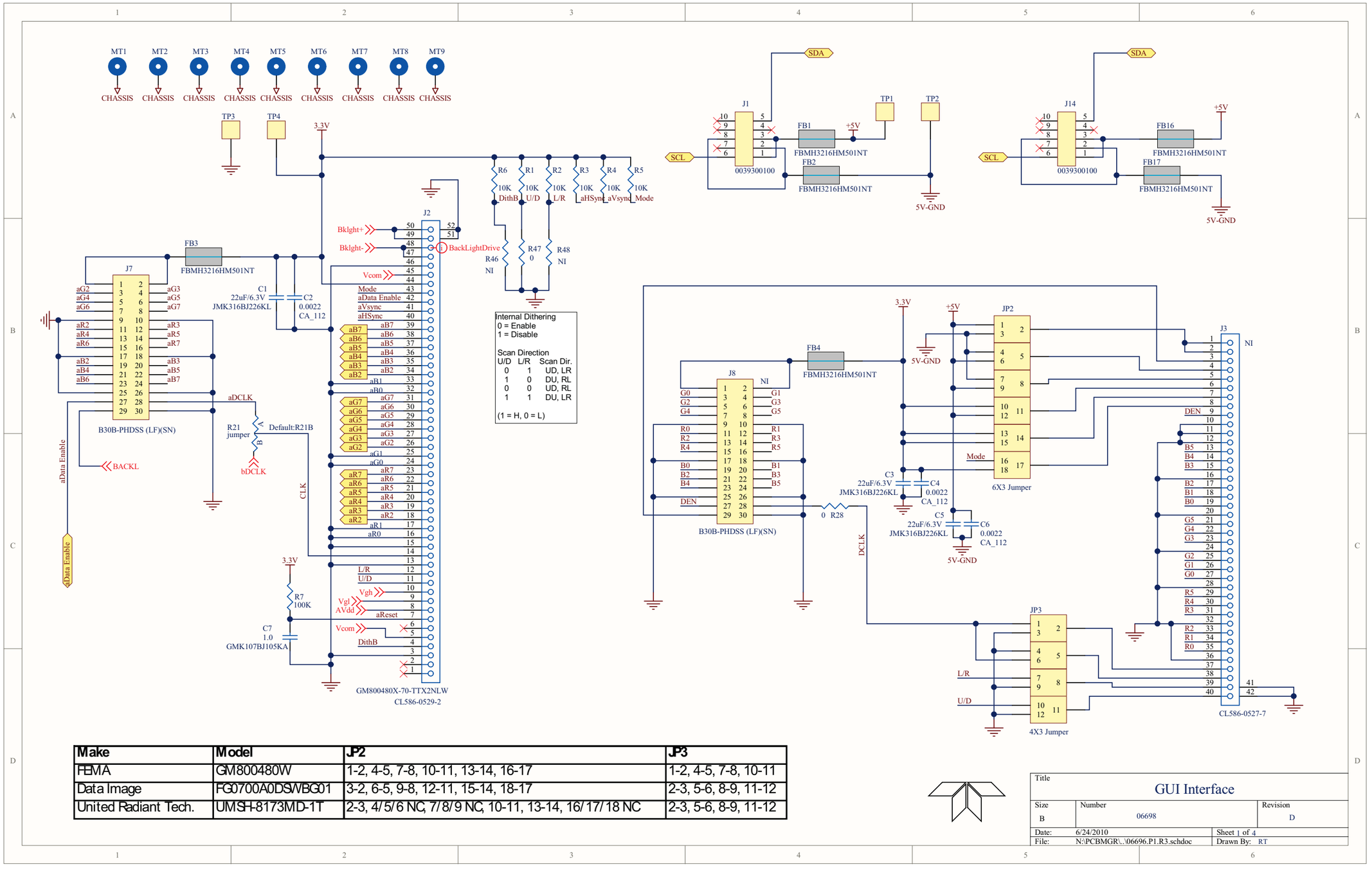

Make	Model	JP2	JP3
FEMA	GM800480W	1-2, 4-5, 7-8, 10-11, 13-14, 16-17	1-2, 4-5, 7-8, 10-11
Data Image	FG0700A0DSWBG01	3-2, 6-5, 9-8, 12-11, 15-14, 18-17	2-3, 5-6, 8-9, 11-12
United Radiant Tech.	UMSH-8173MD-1T	2-3, 4/5/6 NC, 7/8/9 NC, 10-11, 13-14, 16/17/18 NC	2-3, 5-6, 8-9, 11-12

Title	GUI Interface	
Size: B	Number: 06698	Revision: D
Date: 6/24/2010	Sheet 1 of 4	
File: N:\PCBMGR\..\06696.P1.R3.schdoc	Drawn By: RT	

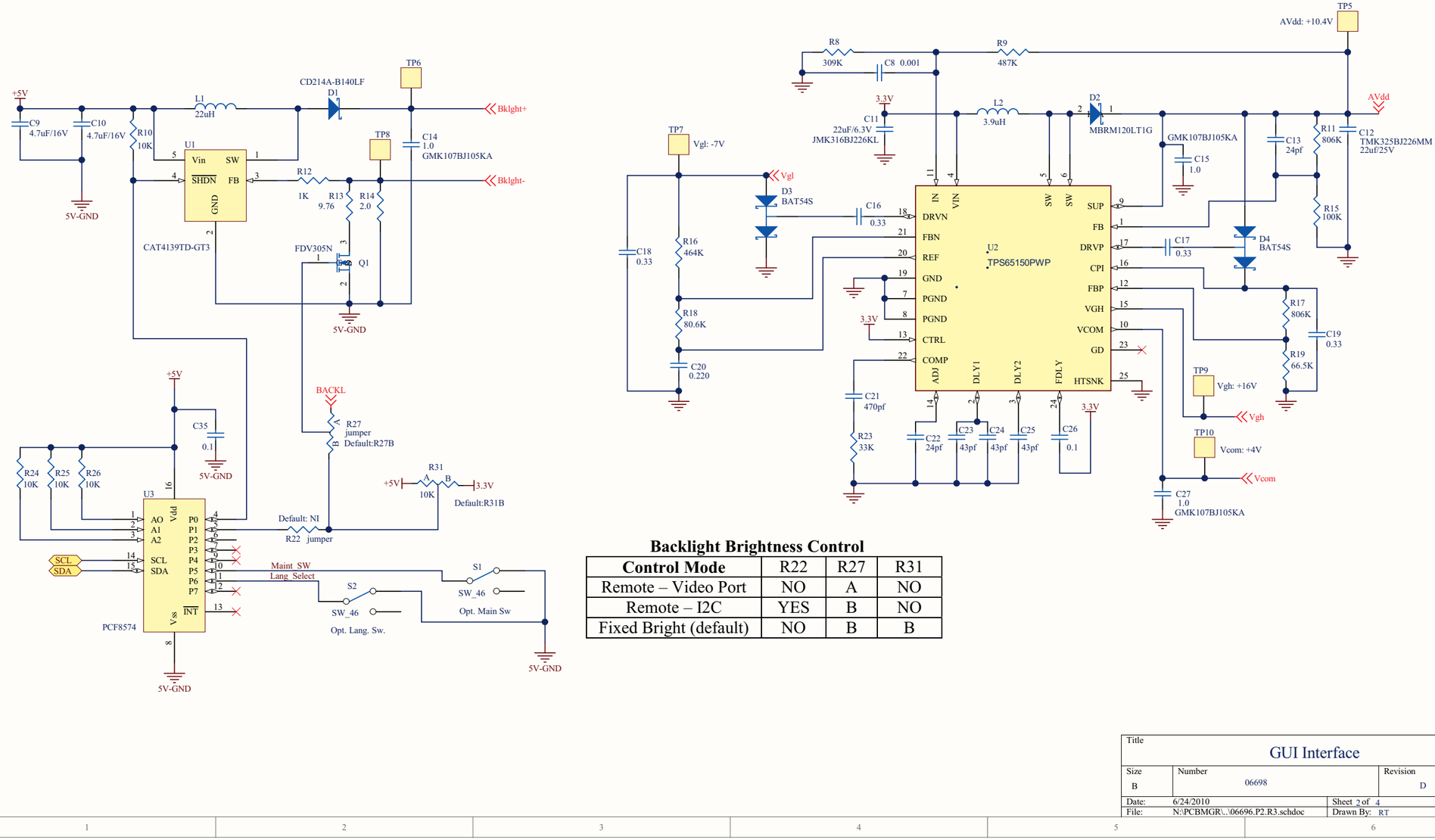

Backlight Brightness Control

Control Mode	R22	R27	R31
Remote – Video Port	NO	A	NO
Remote – I2C	YES	B	NO
Fixed Bright (default)	NO	B	B

Title	GUI Interface	
Size: B	Number: 06698	Revision: D
Date: 6/24/2010		Sheet 2 of 4
File: N:\PCBMGR\..\06696.P2.R3.schdoc		Drawn By: RT

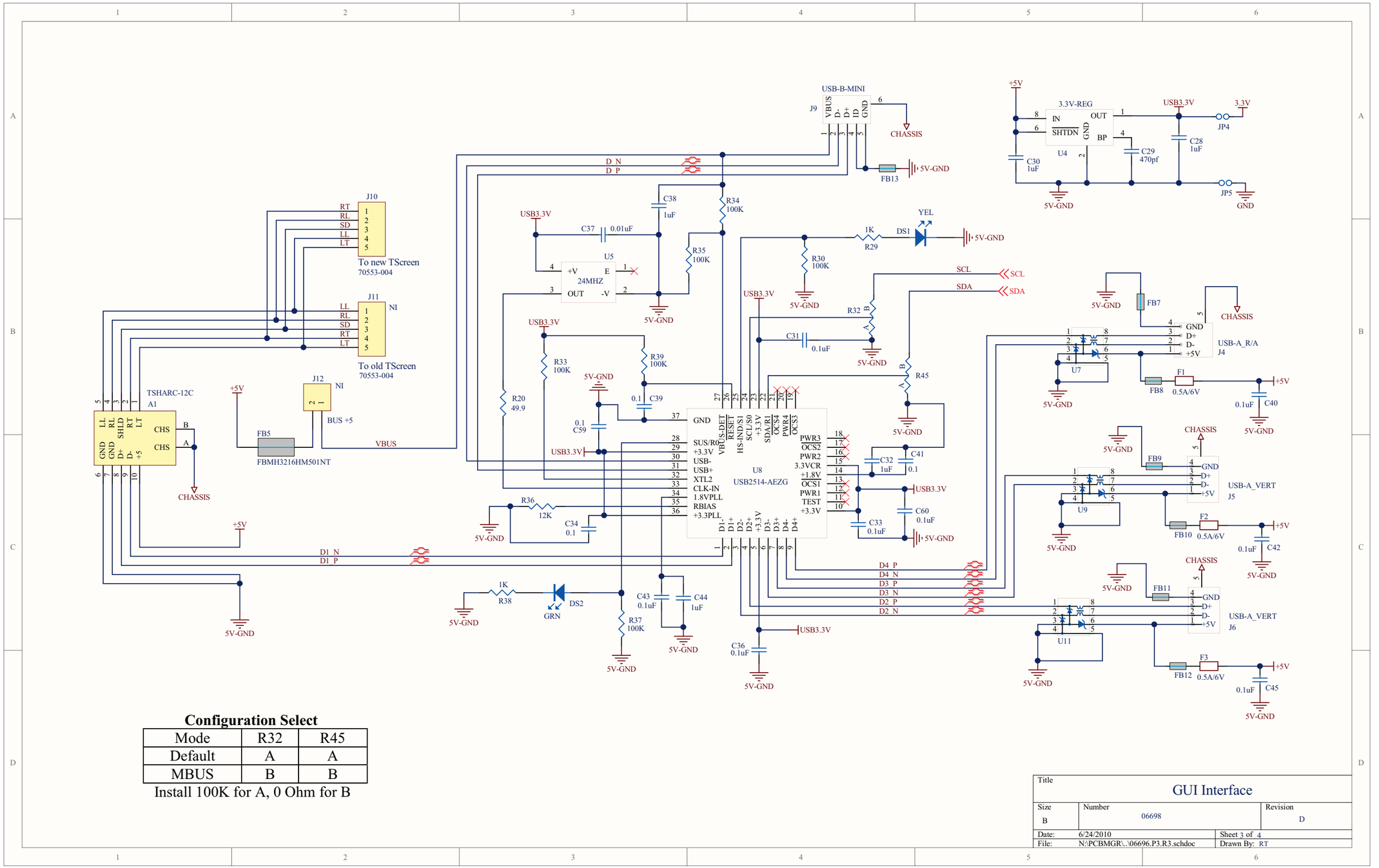

Configuration Select

Mode	R32	R45
Default	A	A
MBUS	B	B

Install 100K for A, 0 Ohm for B

Title: GUI Interface		
Size: B	Number: 06698	Revision: D
Date: 6/24/2010		Sheet 3 of 4
File: N:\PCBMGR\..\06696.P3.R3.schdoc		Drawn By: RT

TOUCH SCREEN INTERFACE CIRCUITRY (TBD)

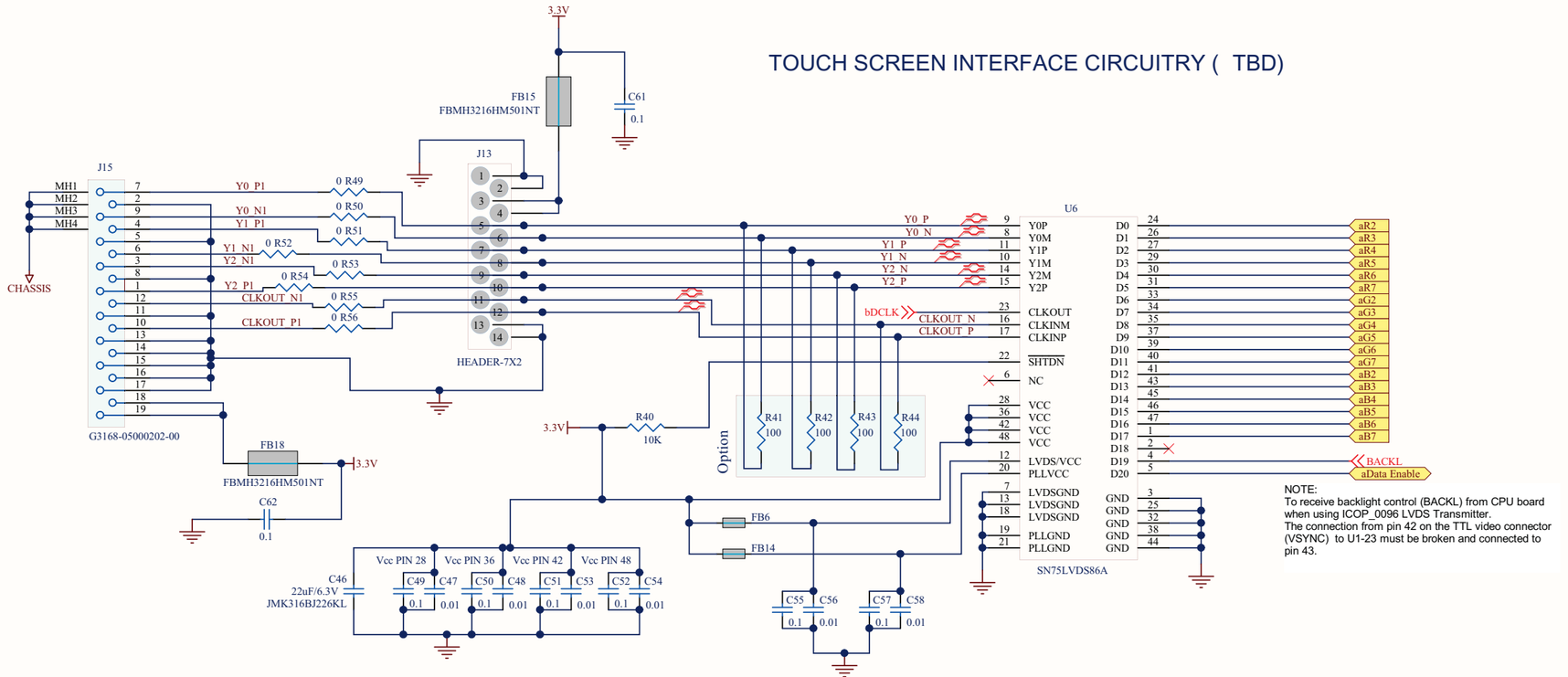

NOTE:
To receive backlight control (BACKL) from CPU board when using ICOP_0096 LVDS Transmitter.
The connection from pin 42 on the TTL video connector (VSYNC) to U1-23 must be broken and connected to pin 43.

Title	GUI Interface	
Size: B	Number: 06698	Revision: D
Date: 6/24/2010		Sheet 4 of 4
File: N:\PCBMGR\..\06696.P4.R3.schdoc		Drawn By: RT

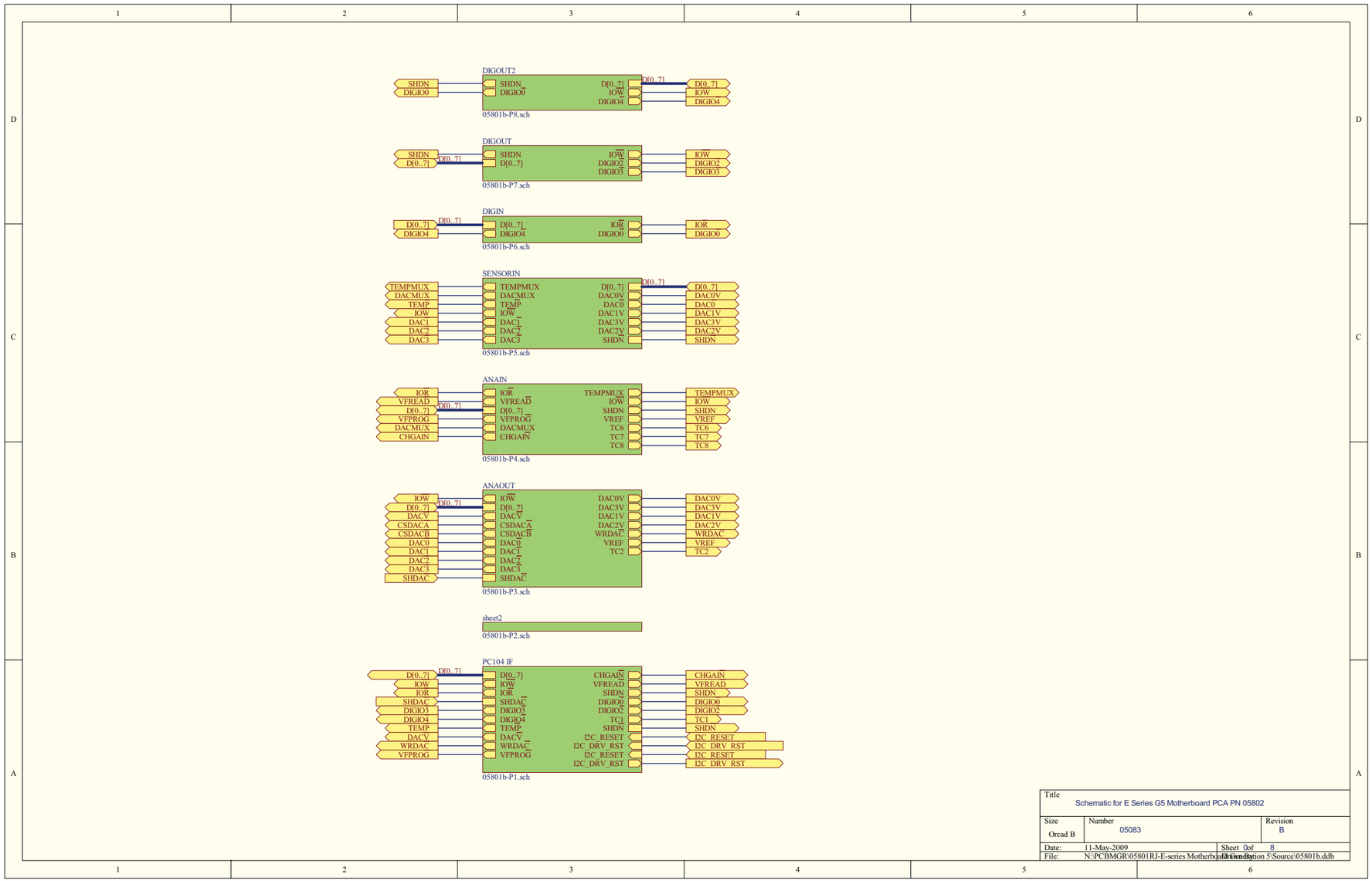
DIGOUT2
SHDN
DIGIO0
SHDN
DIGIO0
D[0..7]
IOW
DIGIO4
D[0..7]
IOW
DIGIO4
05801b-P8.sch
DIGOUT
SHDN
D[0..7]
D[0..7]
SHDN
D[0..7]
IOW
DIGIO2
DIGIO3
IOW
DIGIO2
DIGIO3
05801b-P7.sch
DIGIN
D[0..7]
DIGIO4
D[0..7]
D[0..7]
DIGIO4
IOR
DIGIO0
IOR
DIGIO0
05801b-P6.sch
SENSORIN
TEMPMUX
DACMUX
TEMP
IOW
DAC1
DAC2
DAC3
TEMPMUX
DACMUX
TEMP
IOW
DAC1
DAC2
DAC3
D[0..7]
DAC0V
DAC0
DAC1V
DAC3V
DAC2V
SHDN
D[0..7]
DAC0V
DAC0
DAC1V
DAC3V
DAC2V
SHDN
05801b-P5.sch
ANAIN
IOR
VFREAD
D[0..7]
VFPROG
DACMUX
CHGAIN
D[0..7]
IOR
VFREAD
D[0..7]
VFPROG
DACMUX
CHGAIN
TEMPMUX
IOW
SHDN
VREF
TC6
TC7
TC8
TEMPMUX
IOW
SHDN
VREF
TC6
TC7
TC8
05801b-P4.sch
ANAOUT
IOW
D[0..7]
DACV
CSDACA
CSDACB
DAC0
DAC1
DAC2
DAC3
SHDAC
D[0..7]
IOW
D[0..7]
DACV
CSDACA
CSDACB
DAC0
DAC1
DAC2
DAC3
SHDAC
DAC0V
DAC3V
DAC1V
DAC2V
WRDAC
VREF
TC2
DAC0V
DAC3V
DAC1V
DAC2V
WRDAC
VREF
TC2
05801b-P3.sch
sheet2
05801b-P2.sch
PC104 IF
D[0..7]
IOW
IOR
SHDAC
DIGIO3
DIGIO4
TEMP
DACV
WRDAC
VFPROG
D[0..7]
D[0..7]
IOW
IOR
SHDAC
DIGIO3
DIGIO4
TEMP
DACV
WRDAC
VFPROG
CHGAIN
VFREAD
SHDN
DIGIO0
DIGIO2
TC1
SHDN
I2C_RESET
I2C_DRV_RST
I2C_RESET
I2C_DRV_RST
CHGAIN
VFREAD
SHDN
DIGIO0
DIGIO2
TC1
SHDN
I2C_RESET
I2C_DRV_RST
I2C_RESET
I2C_DRV_RST
05801b-P1.sch
Title
Schematic for E Series G5 Motherboard PCA PN 05802
Size
Orcad B
Number
05083
Revision
B
Date:
11-May-2009
Sheet 0of 8
File:
N:\PCBMGR\05801RJ-E-series Motherboard\Revision 5\Source\05801b.ddb
Drawn By:

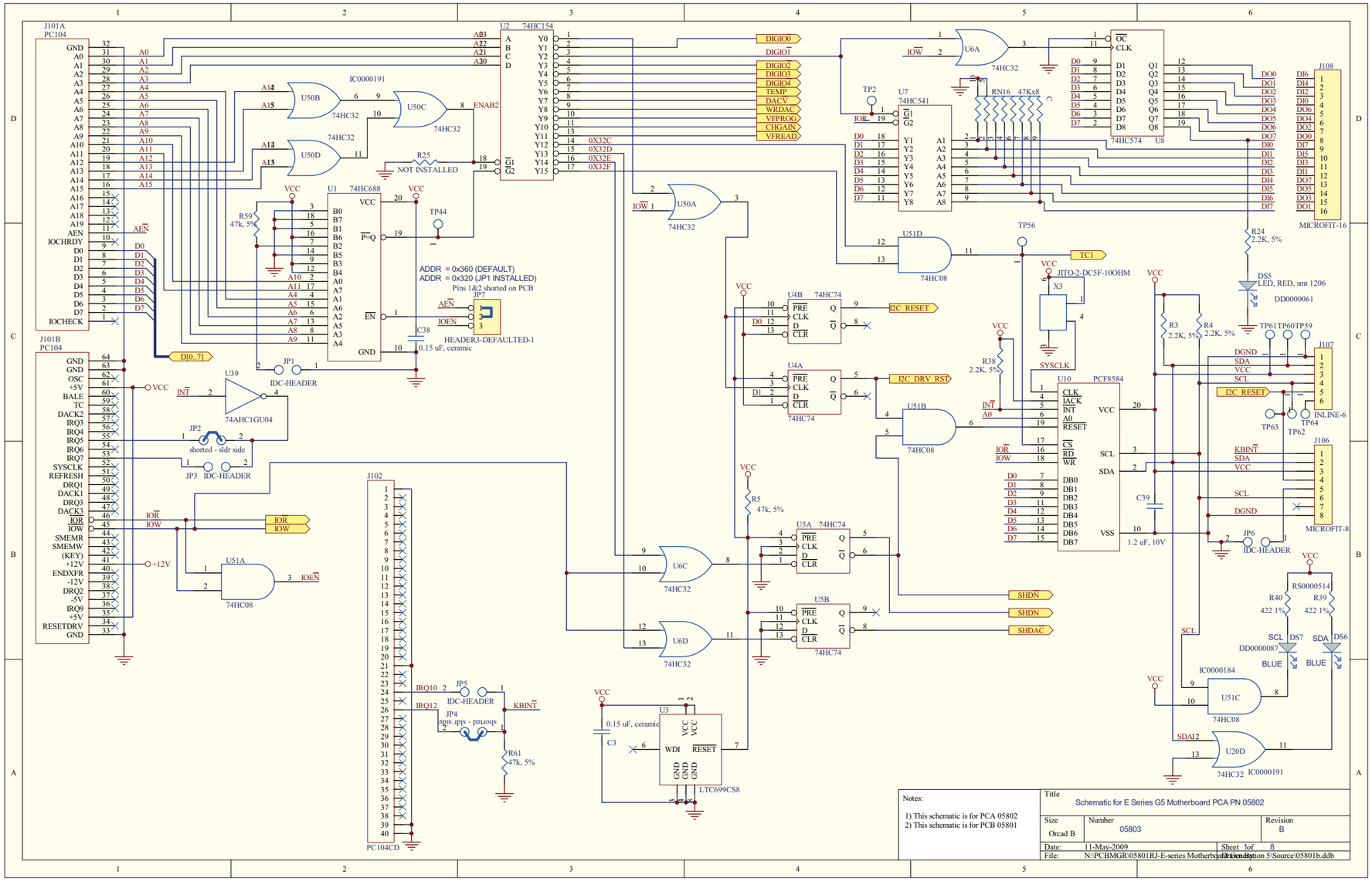

J101A
PC104
J101B
PC104
U2 74HC154
U1 74HC688
U50B 74HC32
U50C 74HC32
U50D 74HC32
U50A 74HC32
U6A 74HC32
U6C 74HC32
U6D 74HC32
U7 74HC541
U8 74HC574
U51D 74HC08
U51B 74HC08
U51A 74HC08
U51C 74HC08
U20D 74HC32
U4B 74HC74
U4A 74HC74
U5A 74HC74
U5B 74HC74
U10 PCF8584
U39 74AHC1GU04
U3 LTC699CS8
J102
PC104CD
J108
MICROFIT-16
J107
INLINE-6
J106
MICROFIT-8
ADDR = 0x360 (DEFAULT)
ADDR = 0x320 (JP1 INSTALLED)
Pins 1&2 shorted on PCB
HEADER3-DEFAULTED-1
IDC-HEADER
shorted - sldr side
NOT INSTALLED
0.15 uF, ceramic
1.2 uF, 10V
LED, RED, smt 1206
DD0000061
DD0000087
RS0000514
IC0000191
IC0000184
Notes:
1) This schematic is for PCA 05802
2) This schematic is for PCB 05801
Title
Schematic for E Series G5 Motherboard PCA PN 05802
Size
Orcad B
Number
05803
Revision
B
Date: 11-May-2009
Sheet 1 of 8
File: N:\PCBMGR\05801RJ-E-series Motherboard Rev-B\Generation 5\Source\05801b.ddb

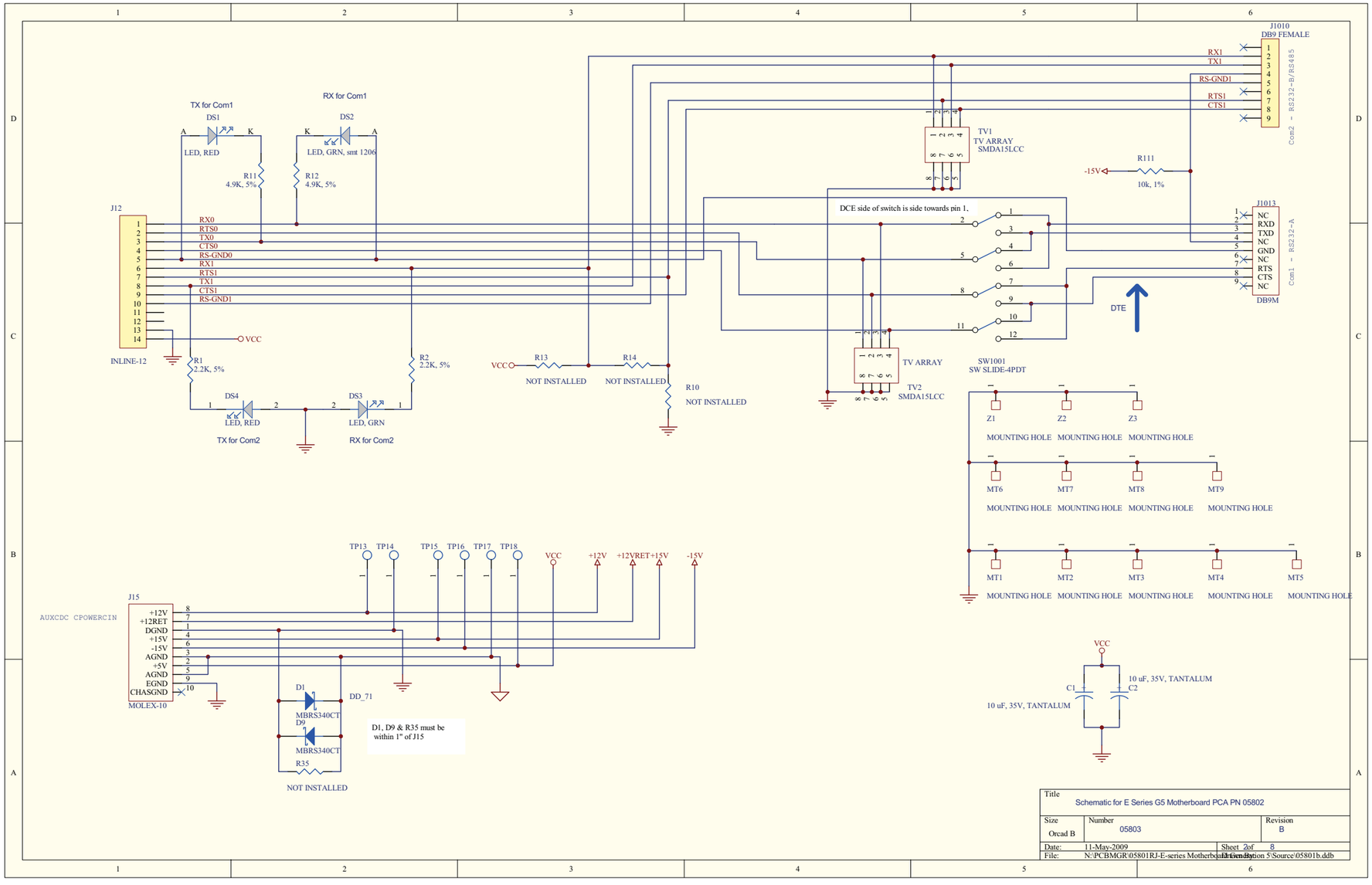
TX for Com1
DS1
LED, RED
R11
4.9K, 5%
RX for Com1
DS2
LED, GRN, smt 1206
R12
4.9K, 5%
J12
INLINE-12
RX0
RTS0
TX0
CTS0
RS-GND0
RX1
RTS1
TX1
CTS1
RS-GND1
VCC
R1
2.2K, 5%
R2
2.2K, 5%
DS4
LED, RED
TX for Com2
DS3
LED, GRN
RX for Com2
R13
NOT INSTALLED
R14
NOT INSTALLED
R10
NOT INSTALLED
TV1
TV ARRAY
SMDA15LCC
TV2
SMDA15LCC
DCE side of switch is side towards pin 1.
DTE
J1010
DB9 FEMALE
Com2 - RS232-B/RS485
R111
-15V
10k, 1%
J1013
DB9M
Com1 - RS232-A
NC
RXD
TXD
GND
RTS
CTS
SW1001
SW SLIDE-4PDT
Z1
Z2
Z3
MOUNTING HOLE
MT1
MT2
MT3
MT4
MT5
MT6
MT7
MT8
MT9
TP13
TP14
TP15
TP16
TP17
TP18
+12V
+12VRET
+15V
-15V
J15
AUXCDC CPOWERCIN
MOLEX-10
+12V
+12RET
DGND
+15V
-15V
AGND
+5V
AGND
EGND
CHASGND
D1
MBRS340CT
DD_71
D9
MBRS340CT
R35
NOT INSTALLED
D1, D9 & R35 must be within 1" of J15
C1
C2
10 uF, 35V, TANTALUM
Title
Schematic for E Series G5 Motherboard PCA PN 05802
Size
Orcad B
Number
05803
Revision
B
Date:
11-May-2009
Sheet 2 of 8
File:
N:\PCBMGR\05801RJ-E-series Motherboard\Version 5\Source\05801b.ddb

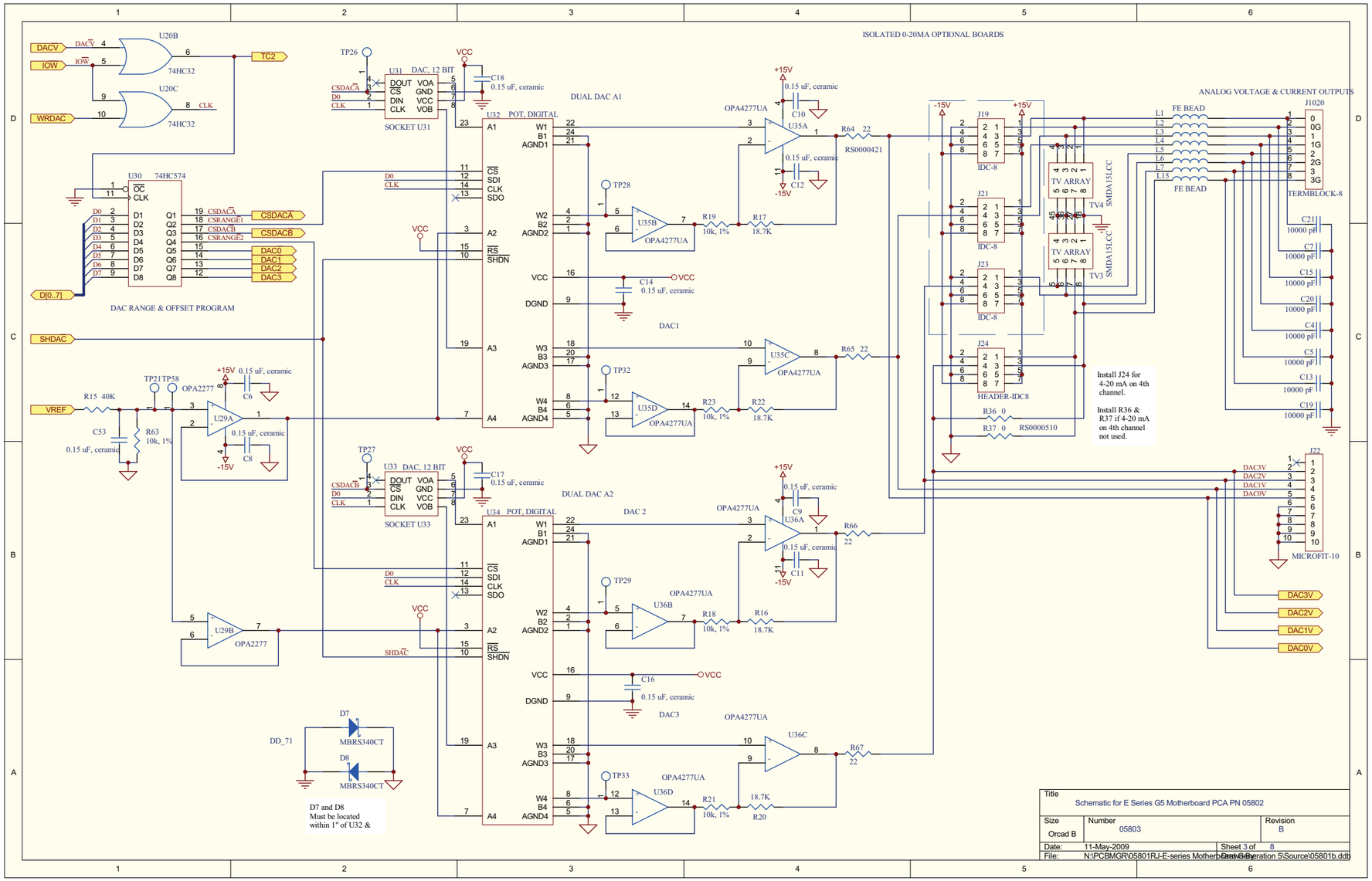
ISOLATED 0-20MA OPTIONAL BOARDS
ANALOG VOLTAGE & CURRENT OUTPUTS
DUAL DAC A1
DAC1
DUAL DAC A2
DAC 2
DAC3
DAC RANGE & OFFSET PROGRAM
U20B
74HC32
U20C
74HC32
U30 74HC574
U31 DAC, 12 BIT
SOCKET U31
U32 POT, DIGITAL
U33 DAC, 12 BIT
SOCKET U33
U34 POT, DIGITAL
OPA4277UA
U35A
U35B
U35C
U35D
U36A
U36B
U36C
U36D
U29A
U29B
OPA2277
J19
J21
J23
J24
IDC-8
HEADER-IDC8
J1020
TERMBLOCK-8
J22
MICROFIT-10
TV ARRAY
SMDA15LCC
FE BEAD
Install J24 for 4-20 mA on 4th channel.
Install R36 & R37 if 4-20 mA on 4th channel not used.
D7 and D8 Must be located within 1" of U32 &
MBRS340CT
Title
Schematic for E Series G5 Motherboard PCA PN 05802
Size Orcad B
Number 05803
Revision B
Date: 11-May-2009
Sheet 3 of 8
File: N:\PCBMGR\05801RJ-E-series Motherboard\Generation 5\Source\05801b.ddb

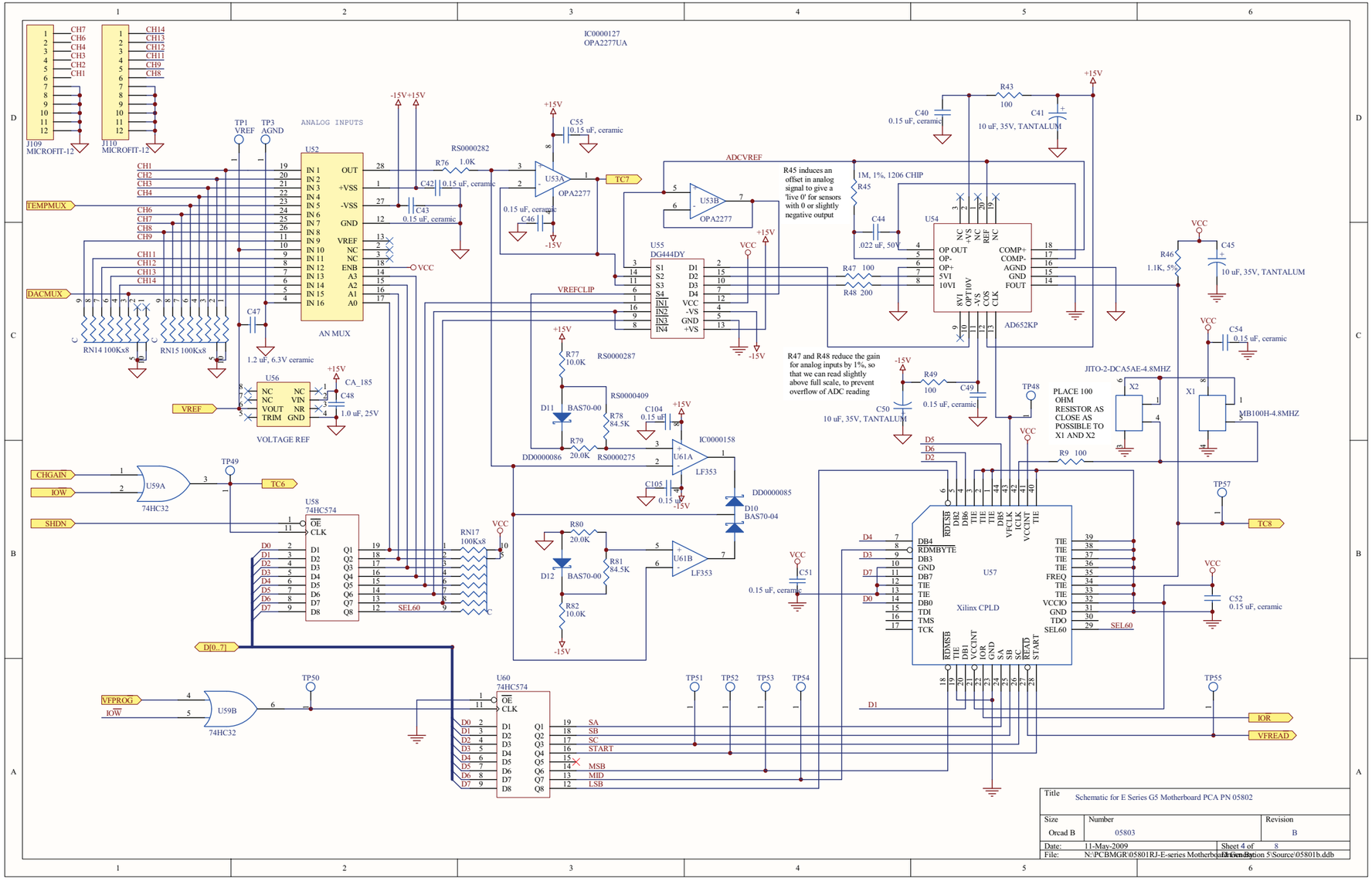
IC0000127
OPA2277UA
ANALOG INPUTS
AN MUX
VOLTAGE REF
U52
U53A
OPA2277
U53B
OPA2277
U55
DG444DY
U54
AD652KP
U56
U58
74HC574
U59A
74HC32
U59B
74HC32
U60
74HC574
U61A
LF353
U61B
LF353
U57
Xilinx CPLD
ADCVREF
VREFCLIP
TEMPMUX
DACMUX
CHGAIN
IOW
SHDN
VFPROG
VREF
IOR
VFREAD
SEL60
JITO-2-DCA5AE-4.8MHZ
MB100H-4.8MHZ
PLACE 100 OHM RESISTOR AS CLOSE AS POSSIBLE TO X1 AND X2
R45 induces an offset in analog signal to give a 'live 0' for sensors with 0 or slightly negative output
R47 and R48 reduce the gain for analog inputs by 1%, so that we can read slightly above full scale, to prevent overflow of ADC reading
Title
Schematic for E Series G5 Motherboard PCA PN 05802
Size
Orcad B
Number
05803
Revision
B
Date: 11-May-2009
Sheet 4 of 8
File: N:\PCBMGR\05801RJ-E-series Motherboard Design Bytion 5\Source\05801b.ddb

BYPASS CAPS MUST BE WITHIN 1/2" OF THE REGULATOR INPUT/OUTPUT PINS

+15V
U23
IN
OUT
ON/OFF
NC
GND
LP2981IM5
C29 1 uF
+5VANA
C60 10 uF, 35V, TANTALUM

D[0..7]
VCC
+15V
U48
MAX382CWN
TEMPMUX
SHDN
OUT
+VSS
GND
V-
ENB
A0
A1
A2
RS
WR
IN 1
IN 2
IN 3
IN 4
IN 5
IN 6
IN 7
IN 8
TEMP
IOW
U59D
74HC32

Install XT1 (through hole) OR XT2 (SMD), but not both.

THERMISTER XT1
XT2
THERMISTER
THERMISTER1
THERMISTER2
THERMISTER3
THERMISTER4
THERMISTER5
THERMISTER6
THERMISTER7
THERMISTER8
+5VANA
J27
MICROFIT-14

RS0000287
R75 10K 1%
R74 10K 1%
R73 10K 1%
R72 10K 1%
R71 10K 1%
R70 10K 1%
R69 10K 1%
R68 10K 1%

+15V-15V
U49
DG444DY
DACMUX
C36 0.15 uF, ceramic
C37 0.15 uF, ceramic
R34 10K
VCC
D1
D2
D3
D4
VCC
-VS
GND
+VS
S1
S2
S3
S4
IN1
IN2
IN3
IN4
RN21 10Kx4
RN18 1Kx4
DAC0V
DAC1V
DAC2V
DAC3V
DAC0
DAC1
DAC2
DAC3

Title	Schematic for E Series G5 Motherboard PCA PN 05802		
Size: Orcad B	Number: 05803	Revision: B	
Date: 11-May-2009	Sheet 5of 8		
File: N:\PCBMGR\05801RJ-E-series Motherboard\Revision 5\Source\05801b.ddb			

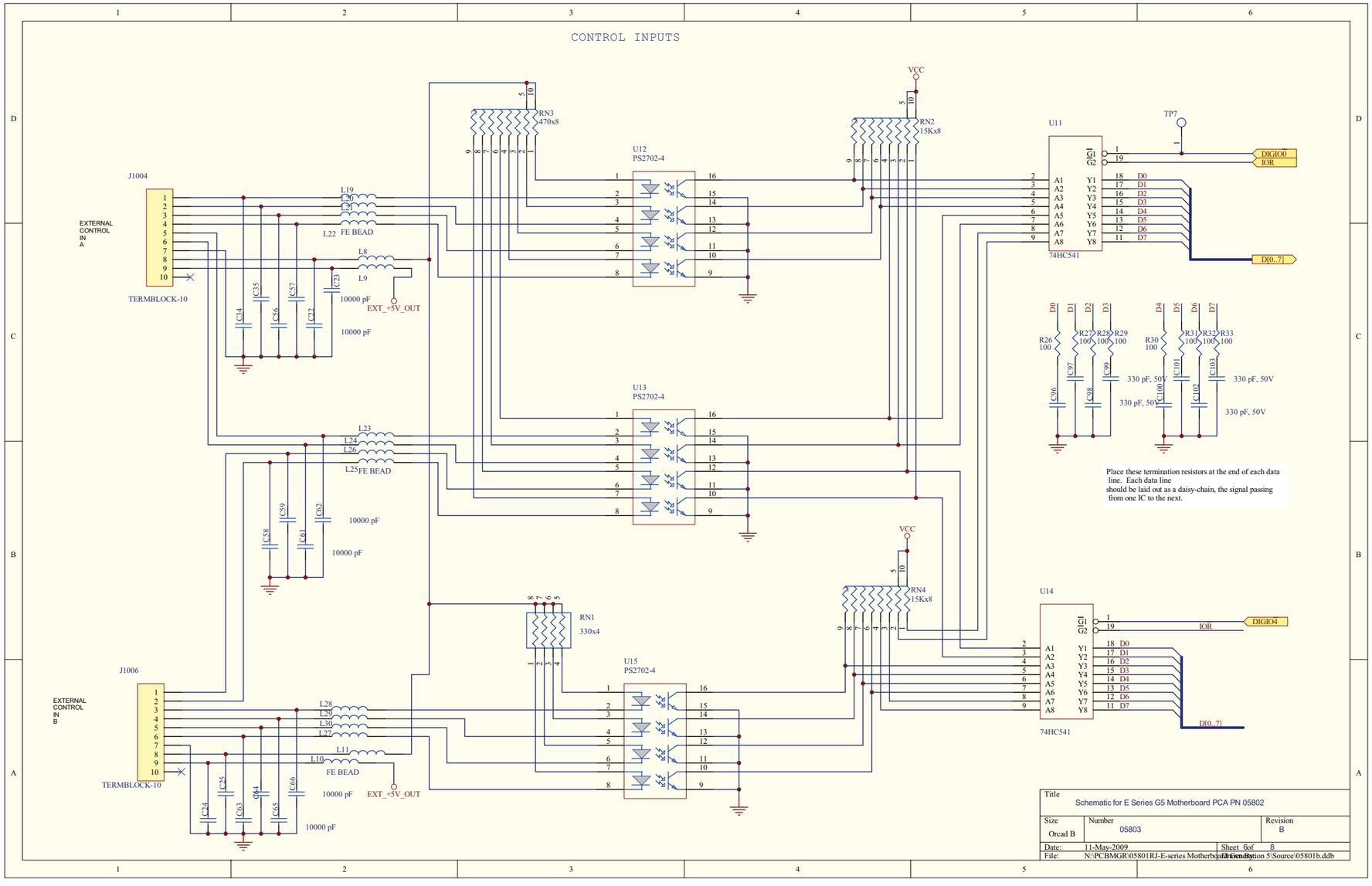
CONTROL INPUTS
J1004
EXTERNAL CONTROL IN A
TERMBLOCK-10
J1006
EXTERNAL CONTROL IN B
TERMBLOCK-10
FE BEAD
10000 pF
EXT_+5V_OUT
RN3 470x8
RN2 15Kx8
RN4 15Kx8
RN1 330x4
U12 PS2702-4
U13 PS2702-4
U15 PS2702-4
U11 74HC541
U14 74HC541
VCC
TP7
DIGIO0
IOR
D[0..7]
DIGIO4
330 pF, 50V
Place these termination resistors at the end of each data line. Each data line should be laid out as a daisy-chain, the signal passing from one IC to the next.
Title
Schematic for E Series G5 Motherboard PCA PN 05802
Size
Orcad B
Number
05803
Revision
B
Date: 11-May-2009
Sheet 6 of 8
File: N:\PCBMGR\05801RJ-E-series Motherboard Gen Bytion 5\Source\05801b.ddb

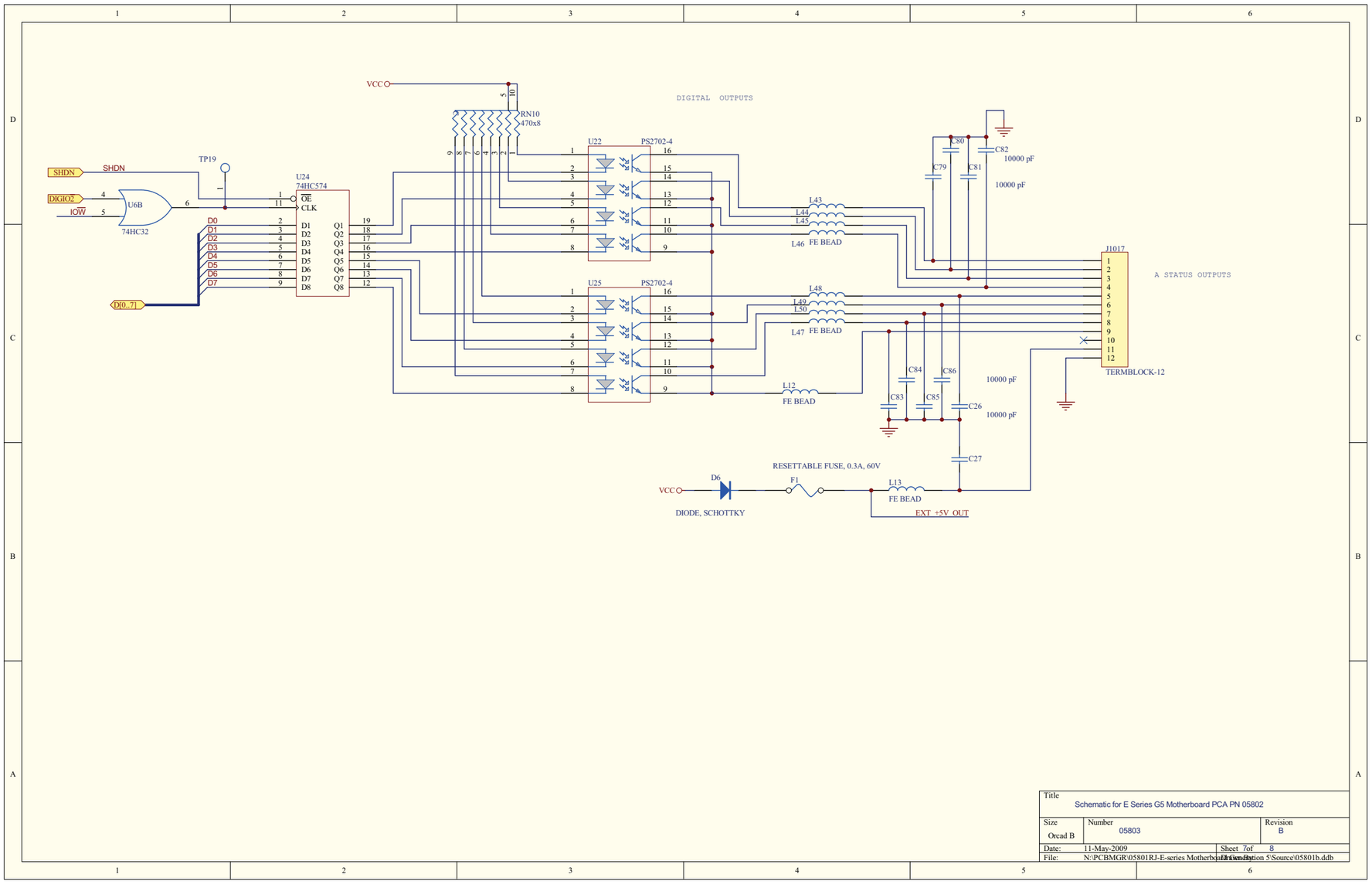
DIGITAL OUTPUTS
VCC
RN10
470x8
SHDN
SHDN
DIGIO2
IOW
U6B
74HC32
TP19
U24
74HC574
OE
CLK
D0
D1
D2
D3
D4
D5
D6
D7
D[0..7]
Q1
Q2
Q3
Q4
Q5
Q6
Q7
Q8
U22
PS2702-4
U25
PS2702-4
L43
L44
L45
L46 FE BEAD
L48
L49
L50
L47 FE BEAD
L12
FE BEAD
C80
C82
10000 pF
C79
C81
10000 pF
C84
C86
10000 pF
C83
C85
C26
10000 pF
C27
RESETTABLE FUSE, 0.3A, 60V
D6
F1
L13
FE BEAD
VCC
DIODE, SCHOTTKY
EXT +5V OUT
J1017
A STATUS OUTPUTS
TERMBLOCK-12
Title
Schematic for E Series G5 Motherboard PCA PN 05802
Size
Orcad B
Number
05803
Revision
B
Date:
11-May-2009
Sheet 7of 8
File:
N:\PCBMGR\05801RJ-E-series Motherboard\Revision 5\Source\05801b.ddb

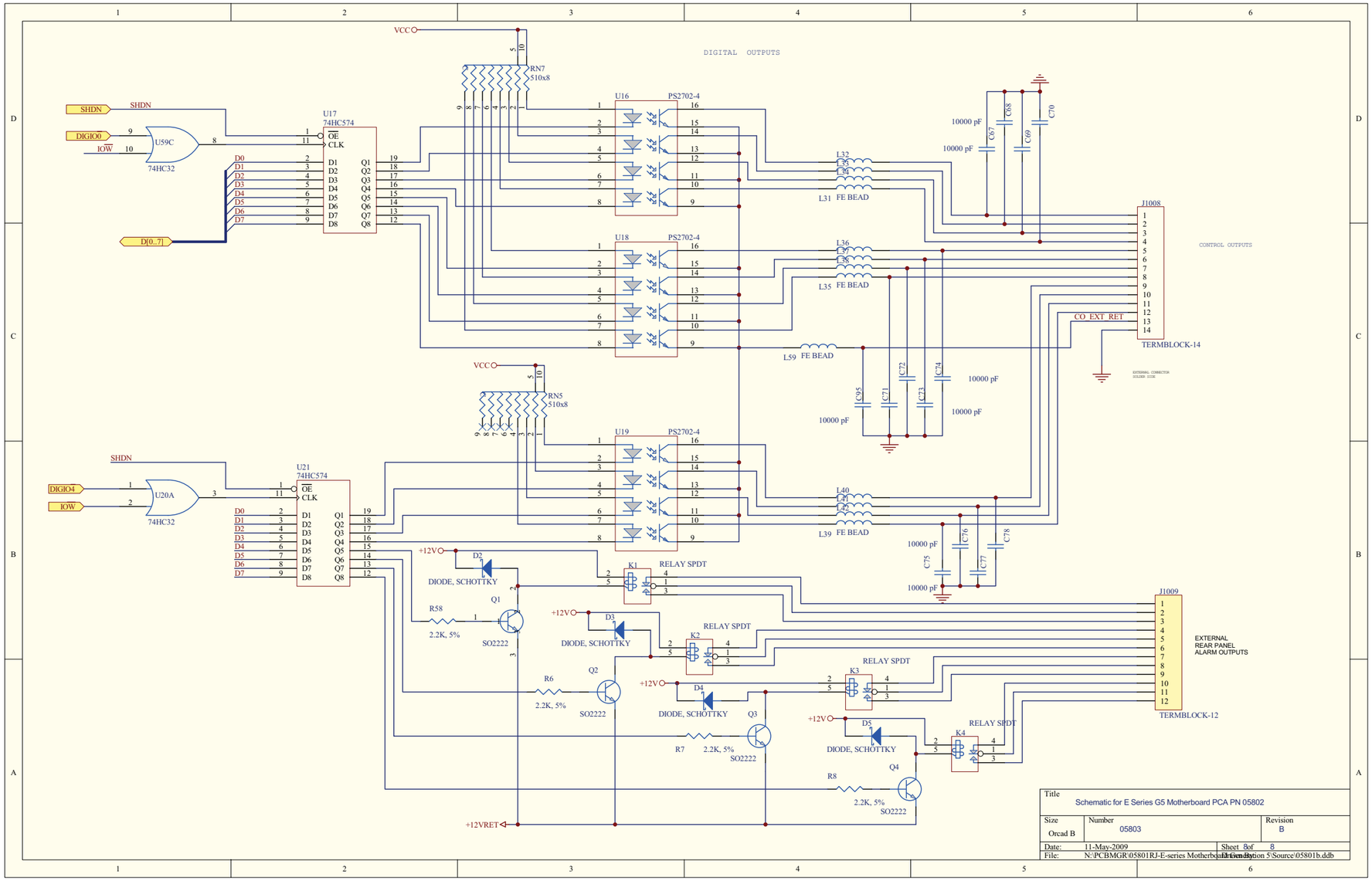
DIGITAL OUTPUTS
VCC
RN7
510x8
SHDN
DIGIO0
IOW
U59C
74HC32
U17
74HC574
OE
CLK
D0
D1
D2
D3
D4
D5
D6
D7
D[0..7]
U16
PS2702-4
U18
PS2702-4
U19
PS2702-4
L32
L31 FE BEAD
L36
L35 FE BEAD
L59 FE BEAD
L40
L39 FE BEAD
10000 pF
C67
C68
C70
C72
C74
C95
C71
C73
C75
C76
C77
C78
J1008
CONTROL OUTPUTS
CO_EXT_RET
TERMBLOCK-14
RN5
510x8
U20A
74HC32
U21
74HC574
+12V
D2
DIODE, SCHOTTKY
K1
RELAY SPDT
Q1
R58
2.2K, 5%
SO2222
D3
K2
Q2
R6
D4
K3
Q3
R7
D5
K4
Q4
R8
+12VRET
J1009
EXTERNAL
REAR PANEL
ALARM OUTPUTS
TERMBLOCK-12
Title
Schematic for E Series G5 Motherboard PCA PN 05802
Size
Orcad B
Number
05803
Revision
B
Date: 11-May-2009
Sheet 8of 8
File: N:\PCBMGR\05801RJ-E-series Motherboard\Revision 5\Source\05801b.ddb
Drawn By:

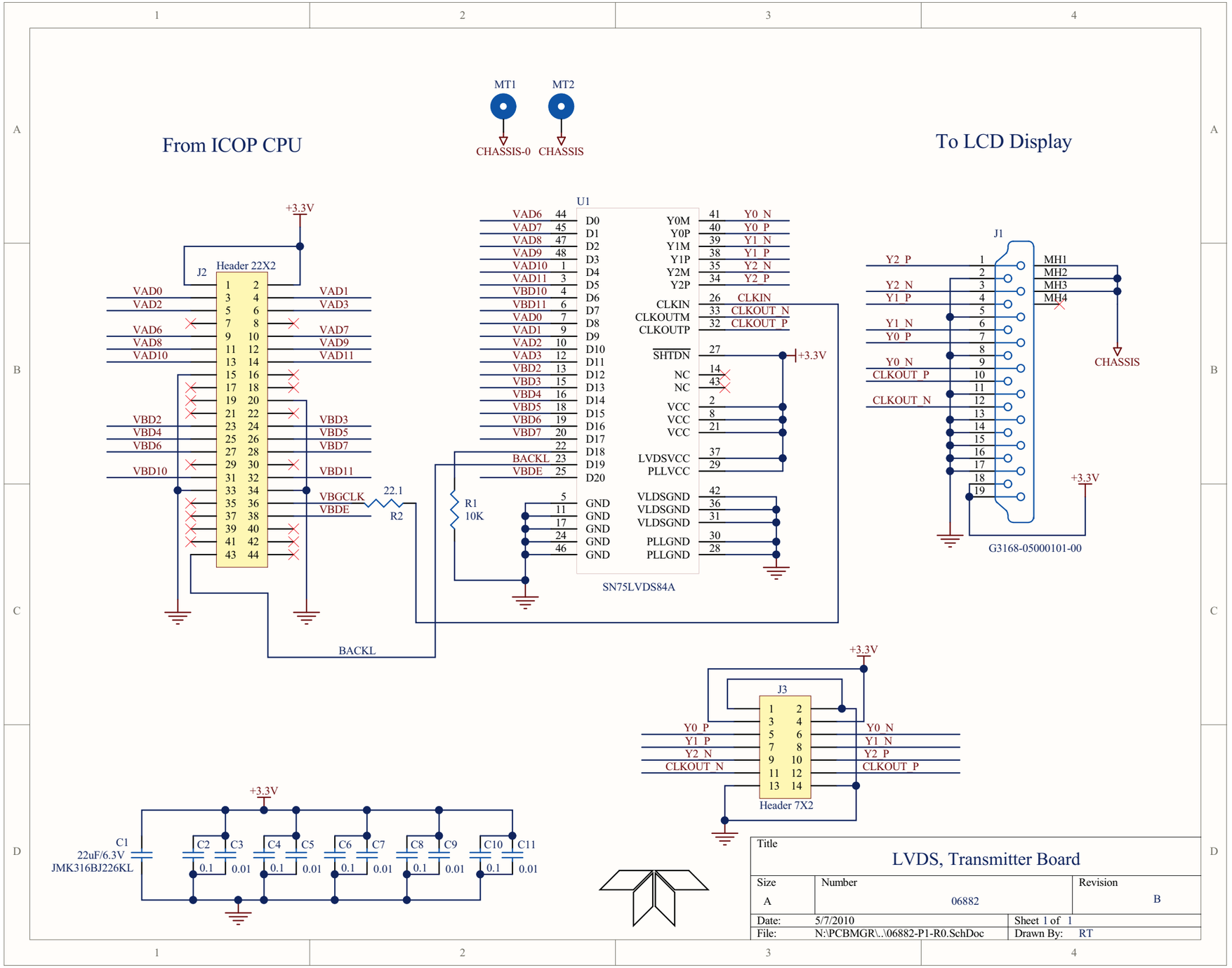

Title	LVDS, Transmitter Board		
Size: A	Number: 06882		Revision: B
Date: 5/7/2010		Sheet 1 of 1	
File: N:\PCBMGR\..\06882-P1-R0.SchDoc		Drawn By: RT	